Commercial Refrigeration Price List

Krack Price List

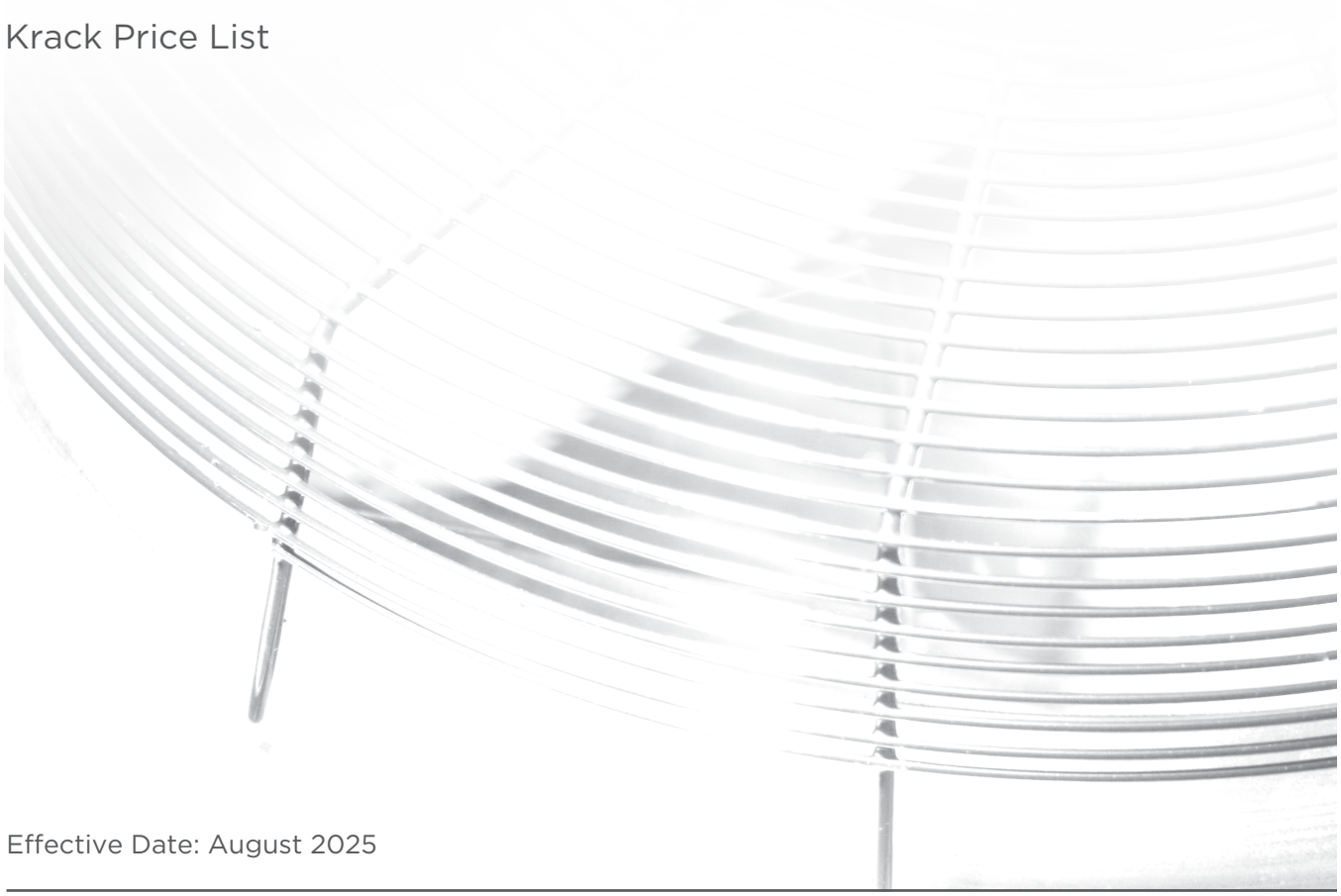

Effective Date: August 2025

Prices are subject to change. As of May 2, 2022, a revised surcharge is now in effect for all new and current quotes as well as orders placed for Krack products. Please contact your Krack / Hussmann sales representative for surcharge details.

Krack Commercial Refrigeration Price Lists are updated quarterly and posted on our website: www.krack.com

Version: August 2025

CHANGES SINCE THE LAST PRICE LIST:

- Added high pressure CO_2 information and pricing.



CO_2 products defined as "standard pressure" are rated for use up to 640 PSI (44.1 bar).
CO_2 products defined as "high pressure" are rated for use up to 1,305 PSI (90 bar), except for SM/SV models which are rated for 1,160 PSI (80 bar).

Krack, a Hussmann Corporation brand

12999 St. Charles Rock Road
Bridgeton, Missouri 63044
Phone: 630.629.7500
Fax: 630.250.3537

Website: www.krack.com

Krack Price Lists are updated periodically with updates posted at www.krack.com.
Please contact Ron Grabowski (ronald.grabowski@hussmann.com) with questions or comments.

Prices, product availability, and specifications are subject to change without notice.

KRACK

LH PRODUCT DESCRIPTION - LOW HEIGHT CENTER MOUNT EVAPORATORS

Version: August 2025

LH MODEL KEY

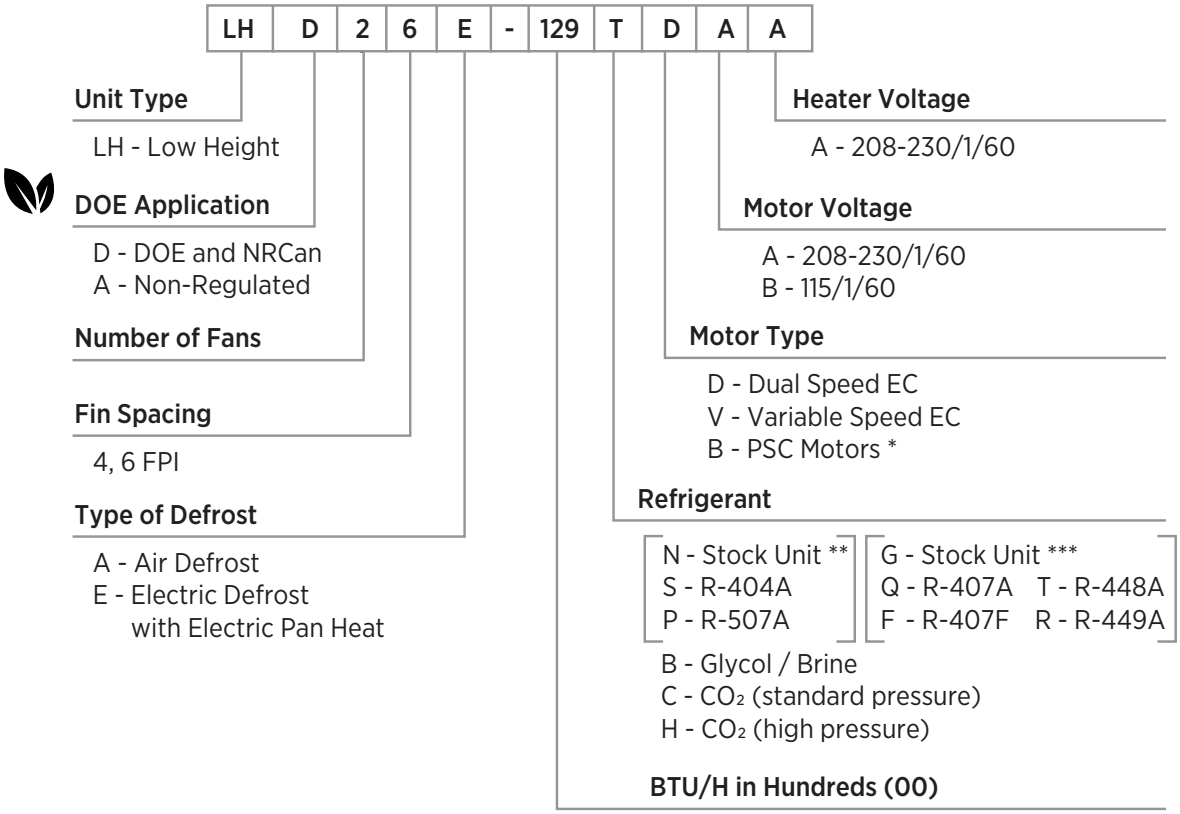

**** PSC motors are not allowed in USA or Canada for any evaporator solution.***
(PSC motors are allowed for glycol / brine applications.)

*** **'N' Stock Units** are for non-glide or glide refrigerants (consult I/O manual for complete refrigerant listing).*

**** **'G' Stock Units** are for glide refrigerants only (consult I/O manual for complete refrigerant listing).*

DOE / NRCan applications require dual speed or variable speed fans.

DOE / NRCan -

The LH Series is constructed for ease of maintenance with testing and options to meet efficiency required by DOE and NRCan regulations.

Prices, product availability, and specifications are subject to change without notice.

LH PRODUCT DESCRIPTION - LOW HEIGHT CENTER MOUNT EVAPORATORS

Version: August 2025

LH MODELS

AIR DEFROST - MEDIUM TEMPERATURE - LOW HEIGHT

MODEL	LIST PRICE		CAPACITY (BTU/H) @ 10° F TD +25° F Evap	AIR FLOW (CFM)	DIMENSIONS (IN)			SHIP WGT (LB)	
	EXCEPT REFRIGERANT 'H'	REFRIGERANT 'H'			L	W	H	EXCEPT REFRIGERANT 'H'	REFRIGERANT 'H'
LH*16A-047[ ]D	$1,830	$3,056	4,700	650	32.88	26.06	9.25	42	47
LH*26A-094[ ]D	$2,860	$4,776	9,400	1,300	54.88	26.06	9.25	70	79
LH*36A-140[ ]D	$3,950	$6,597	14,000	1,950	76.88	26.06	9.25	123	136
LH*46A-187[ ]D	$4,960	$8,283	18,700	2,600	98.88	26.06	9.25	164	182
LH*14A-036[ ]D	$1,750	$2,923	3,600	680	32.88	26.06	9.25	38	43
LH*24A-073[ ]D	$2,640	$4,409	7,300	1,370	54.88	26.06	9.25	64	73
LH*34A-109[ ]D	$3,390	$5,661	10,900	2,050	76.88	26.06	9.25	105	118
LH*44A-145[ ]D	$4,630	$7,732	14,500	2,730	98.88	26.06	9.25	146	164

Review technical bulletin for use of 'D' for DOE / NRCan compliant model or 'A' for non-regulated.

Dual Speed EC motors are standard; include price adder for Variable Speed EC 'V' motors.

[ ] Refrigerant letter. Include price adder for circuiting with 'B' - glycol / brine.

ELECTRIC DEFROST- LOW / MEDIUM TEMPERATURE - LOW HEIGHT

MODEL	LIST PRICE		CAPACITY (BTU/H) @ 10° F TD		AIR FLOW (CFM)	DIMENSIONS (IN)			SHIP WGT (LB)	
	EXCEPT REFRIGERANT 'H'	REFRIGERANT 'H'	-20° F Evap	+20° F Evap		L	W	H	EXCEPT REFRIGERANT 'H'	REFRIGERANT 'H'
LH*16E-043[ ]D	$2,370	$3,958	4,300	4,700	650	32.88	26.06	9.25	44	49
LH*26E-086[ ]D	$3,510	$5,862	8,600	9,400	1,300	54.88	26.06	9.25	73	82
LH*36E-129[ ]D	$4,460	$7,448	12,900	14,000	1,950	76.88	26.06	9.25	127	140
LH*46E-171[ ]D	$5,540	$9,252	17,100	18,700	2,600	98.88	26.06	9.25	169	187
LH*14E-033[ ]D	$2,220	$3,707	3,300	3,600	680	32.88	26.06	9.25	40	45
LH*24E-067[ ]D	$3,280	$5,478	6,700	7,300	1,370	54.88	26.06	9.25	67	76
LH*34E-100[ ]D	$4,350	$7,265	10,000	10,900	2,050	76.88	26.06	9.25	109	122
LH*44E-132[ ]D	$4,990	$8,333	13,200	14,500	2,730	98.88	26.06	9.25	150	168

Review technical bulletin for use of 'D' for DOE/NRCan compliant model or 'A' for non-regulated.

Dual Speed EC motors are standard; include price adder for Variable Speed EC 'V' motors.

[ ] Refrigerant letter. Include price adder for circuiting with 'B' - glycol / brine.

LH MODEL OPTIONS

NUMBER OF FANS	VARIABLE SPEED EC MOTOR ADDER*	PSC MOTOR DEDUCT*	PAINTED CABINET WHITE / BLACK	SS HOUSING AND SS NON-INSULATED DRAIN PAN	SS NON-INSULATED DRAIN PAN (ONLY)	ELECTROFIN (AIR OR GAS DEFROST ONLY)	COPPER FIN	GLYCOL CIRCUITING ADDER
1	$360	($10)	$540	$1,180	$370	$1,530	$390	$290
2	$380	($20)	$540	$1,650	$450	$1,530	$780	$290
3	$400	($30)	$650	$2,190	$590	$1,530	$1,170	$290
4	$420	($40)	$720	$2,660	$650	$1,530	$1,560	$290

[1] Variable Speed EC Motor Adder includes built-in signal amplifier list price.

Insulated or stainless steel drain pan are NOT available on LH due to drain fitting and forming requirements.

- DOE / NRCan models are shown and can be applied for non-regulated applications without controls.
- Confirm AWEF for refrigerant being applied and select Variable Speed motor if required.
- Controls for Dual Speed or Variable Speed are not included in unit pricing shown.
- Select from controls options on Unit Cooler Accessories.
- Capacities shown reflect midpoint evaporating temperature.

*** PSC MOTORS ARE NOT ALLOWED IN THE US AND CANADA FOR DIRECT EXPANSION APPLICATIONS. DO NOT CHOOSE THIS DEDUCT FOR UNITS SHIPPING TO THESE LOCATIONS.**

Prices, product availability, and specifications are subject to change without notice.

GH / GL PRODUCT DESCRIPTION - LOW VELOCITY CENTER MOUNT MODELS

Version: August 2025

GH / GL MODEL KEY

GL	D	3	6	D	-	135	T	D	A	K

Unit Type

GH & GL: Gentle Air

DOE Application

D - DOE and NRCan
A - Non-Regulated

Number of Fans

Fin Spacing

4, 6 FPI

Type of Defrost

A - Air Defrost
D - Electric Defrost w/ No Pan Heat
F - 3 Pipe Hot Gas w/ No Pan Heat#
H - 3 Pipe Hot Gas w/ Electric Pan Heat#
M - 2 Pipe Koolgas w/ No Pan Heat##
P - 2 Pipe Koolgas w/ Electric Pan Heat##

BTU/H in Hundreds (00)

Refrigerant

N - Stock Unit ***
S - R-404A
P - R-507A

G - Stock Unit ****
Q - R-407A
T - R-448A
F - R-407F
R - R-449A

B - Glycol / Brine
C - CO_2 (standard pressure)
H - CO_2 (high pressure)

Motor Type

D - Dual Speed EC
V - Variable Speed EC
B - PSC Motors **

Motor Voltage

A - 208-230/1/60
B - 115/1/60

Heater Type

A - 208-230/1/60
B - 115/1/60 *
K - 208-230/3/60

* Available on pan heaters for "H" and "P" defrost options only.

** PSC motors are not allowed in USA or Canada for any evaporator solution.

** 'N' Stock Units are for non-glide or glide refrigerants (consult I/O manual for complete refrigerant listing).

*** 'G' Stock Units are for glide refrigerants only (consult I/O manual for complete refrigerant listing).

F and H defrost types not available for CO_2 (C or H) refrigerant.

M and P defrost types not available for C refrigerant, H refrigerant will be available soon.

DOE / NRCan -

The GH / GL Series is constructed for ease of maintenance with testing and options to meet efficiency required by DOE and NRCan regulations.

Prices, product availability, and specifications are subject to change without notice.

GH / GL PRODUCT DESCRIPTION - LOW VELOCITY CENTER MOUNT MODELS

Version: August 2025

GH / GL MODEL - Air Defrost, Medium Temperature, Low Velocity

GENTLE AIR - 18" HIGH SILHOUETTE

MODEL	LIST PRICE		CAPACITY (BTU/H) @ 10° F TD +25° F Evap	AIR FLOW (CFM)	DIMENSIONS (IN)			SHIP WGT (LB)	
	EXCEPT REFRIGERANT 'H'	REFRIGERANT 'H'			L	W	H	EXCEPT REFRIGERANT 'H'	REFRIGERANT 'H'
GH*16A-060[ ]D	$2,850	$4,760	6,000	900	31.75	28.75	18.25	130	140
GH*26A-130[ ]D	$4,460	$7,448	13,000	1,800	49.75	28.75	18.25	180	197
GH*36A-198[ ]D	$6,340	$10,588	19,800	2,700	67.75	28.75	18.25	240	265
GH*46A-270[ ]D	$7,690	$12,842	27,000	3,600	85.75	28.75	18.25	320	352
GH*56A-340[ ]D	$9,100	$15,197	34,000	4,500	103.75	28.75	18.25	370	409
GH*66A-410[ ]D	$10,530	$17,585	41,000	5,400	121.75	28.75	18.25	420	467
GH*14A-050[ ]D	$2,680	$4,476	5,000	940	31.75	28.75	18.25	120	130
GH*24A-100[ ]D	$4,390	$7,331	10,000	1,880	49.75	28.75	18.25	170	187
GH*34A-150[ ]D	$6,230	$10,404	15,000	2,820	67.75	28.75	18.25	230	255
GH*44A-200[ ]D	$7,560	$12,625	20,000	3,760	85.75	28.75	18.25	310	342
GH*54A-250[ ]D	$9,020	$15,063	25,000	4,700	103.75	28.75	18.25	360	399
GH*64A-300[ ]D	$10,430	$17,418	30,000	5,640	121.75	28.75	18.25	410	457

GENTLE AIR - 12" LOW SILHOUETTE

MODEL	LIST PRICE		CAPACITY (BTU/H) @ 10° F TD +25° F Evap	AIR FLOW (CFM)	DIMENSIONS (IN)			SHIP WGT (LB)	
	EXCEPT REFRIGERANT 'H'	REFRIGERANT 'H'			L	W	H	EXCEPT REFRIGERANT 'H'	REFRIGERANT 'H'
GL*16A-045[ ]D	$2,450	$4,092	4,500	600	31.75	28.75	12.25	100	105
GL*26A-090[ ]D	$3,840	$6,413	9,000	1,200	49.75	28.75	12.25	140	149
GL*36A-135[ ]D	$5,190	$8,667	13,500	1,800	67.75	28.75	12.25	190	203
GL*46A-180[ ]D	$6,700	$11,189	18,000	2,400	85.75	28.75	12.25	250	267
GL*56A-225[ ]D	$7,760	$12,959	22,500	3,000	103.75	28.75	12.25	290	312
GL*66A-268[ ]D	$8,580	$14,329	26,800	3,600	121.75	28.75	12.25	340	366
GL*14A-035[ ]D	$2,440	$4,075	3,500	630	31.75	28.75	12.25	90	95
GL*24A-070[ ]D	$3,800	$6,346	7,000	1,260	49.75	28.75	12.25	130	139
GL*34A-105[ ]D	$5,130	$8,567	10,500	1,890	67.75	28.75	12.25	180	193
GL*44A-140[ ]D	$6,640	$11,089	14,000	2,520	85.75	28.75	12.25	240	257
GL*54A-175[ ]D	$7,680	$12,826	17,500	3,150	103.75	28.75	12.25	280	302
GL*64A-210[ ]D	$8,350	$13,945	21,000	3,780	121.75	28.75	12.25	330	356

** Review technical bulletin for use of 'D' for DOE / NRCan compliant model or 'A' for non-regulated.*
Dual Speed EC motors are standard; include price adder for Variable Speed EC 'V' motors.
[ ] Refrigerant letter. Include price adder for circuiting with 'B' - glycol / brine.

GH / GL MODEL OPTIONS

NUMBER OF FANS	VARIABLE SPEED EC MOTOR ADDER*	PSC MOTOR DEDUCT*	COPPER FIN	ELECTROFIN (AIR OR GAS DEFROST ONLY)	GLYCOL CIRCUITING ADDER
1	$360	($10)	$540	$2,550	$290
2	$380	($20)	$1,070	$2,550	$290
3	$400	($30)	$1,610	$2,550	$290
4	$420	($40)	$2,140	$2,550	$290
5	$440	($50)	$2,680	$2,550	$290
6	$460	($60)	$3,210	$2,700	$290

NUMBER OF FANS	INSULATED ALUMINUM DRAIN PAN	SS HOUSING AND ALUMINUM INSULATED PAN	SS HOUSING AND SS NON-INSULATED DRAIN PAN	SS DRAIN PAN **	PAINTED CABINET WHITE / BLACK	AIR FILTERS, WIRE FAN GUARD
1	$490	$2,710	$1,640	$590	$540	$80
2	$560	$3,390	$2,140	$710	$540	$160
3	$640	$3,970	$2,690	$880	$650	$240
4	$750	$4,840	$3,230	$1,040	$720	$320
5	$950	$6,350	$4,110	$1,490	$860	$400
6	$1,370	$7,060	$4,610	$1,650	$1,050	$480

1 Variable Speed EC Motor Adder includes built-in signal amplifier list price.
*** SS Drain Pan is not available insulated due to difficulty forming stainless steel.*

- DOE / NRCan models are shown and can be applied for non-regulated applications without controls.
- Confirm AWEF for refrigerant being applied and select Variable Speed motor if required.
- Controls for Dual Speed or Variable Speed are not included in unit pricing shown.
- Select from controls options on Unit Cooler Accessories.
- Capacities shown reflect midpoint evaporating temperature.

*** PSC MOTORS ARE NOT ALLOWED IN THE US AND CANADA FOR DIRECT EXPANSION APPLICATIONS. DO NOT CHOOSE THIS DEDUCT FOR UNITS SHIPPING TO THESE LOCATIONS**

Prices, product availability, and specifications are subject to change without notice.

GH / GL PRODUCT DESCRIPTION - LOW VELOCITY CENTER MOUNT MODELS

Version: August 2025

GH / GL MODEL - Electric Defrost, Medium Temperature, Low Velocity

GENTLE AIR - 18" HIGH SILHOUETTE

MODEL	LIST PRICE		CAPACITY (BTU/H) @ 10° F TD +25° F Evap	AIR FLOW (CFM)	DIMENSIONS (IN)			SHIP WGT (LB)	
	EXCEPT REFRIGERANT 'H'	REFRIGERANT 'H'			L	W	H	EXCEPT REFRIGERANT 'H'	REFRIGERANT 'H'
GH*16D-060[ ]D	$3,120	$5,210	6,000	900	31.75	28.75	18.25	130	140
GH*26D-130[ ]D	$5,110	$8,534	13,000	1,800	49.75	28.75	18.25	180	197
GH*36D-198[ ]D	$7,170	$11,974	19,800	2,700	67.75	28.75	18.25	240	265
GH*46D-270[ ]D	$8,550	$14,279	27,000	3,600	85.75	28.75	18.25	320	352
GH*56D-340[ ]D	$10,130	$16,917	34,000	4,500	103.75	28.75	18.25	370	409
GH*66D-410[ ]D	$11,700	$19,539	41,000	5,400	121.75	28.75	18.25	420	467
GH*14D-050[ ]D	$3,000	$5,010	5,000	940	31.75	28.75	18.25	120	130
GH*24D-100[ ]D	$4,980	$8,317	10,000	1,880	49.75	28.75	18.25	170	187
GH*34D-150[ ]D	$6,970	$11,640	15,000	2,820	67.75	28.75	18.25	230	255
GH*44D-200[ ]D	$8,420	$14,061	20,000	3,760	85.75	28.75	18.25	310	342
GH*54D-250[ ]D	$10,010	$16,717	25,000	4,700	103.75	28.75	18.25	360	399
GH*64D-300[ ]D	$11,570	$19,322	30,000	5,640	121.75	28.75	18.25	410	457

GENTLE AIR - 12" LOW SILHOUETTE

MODEL	LIST PRICE		CAPACITY (BTU/H) @ 10° F TD +25° F Evap	AIR FLOW (CFM)	DIMENSIONS (IN)			SHIP WGT (LB)	
	EXCEPT REFRIGERANT 'H'	REFRIGERANT 'H'			L	W	H	EXCEPT REFRIGERANT 'H'	REFRIGERANT 'H'
GL*16D-045[ ]D	$2,710	$4,526	4,500	600	31.75	28.75	12.25	100	105
GL*26D-090[ ]D	$4,270	$7,131	9,000	1,200	49.75	28.75	12.25	140	149
GL*36D-135[ ]D	$5,740	$9,586	13,500	1,800	67.75	28.75	12.25	190	203
GL*46D-180[ ]D	$7,430	$12,408	18,000	2,400	85.75	28.75	12.25	250	267
GL*56D-225[ ]D	$8,610	$14,379	22,500	3,000	103.75	28.75	12.25	290	312
GL*66D-268[ ]D	$9,790	$16,349	26,800	3,600	121.75	28.75	12.25	340	366
GL*14D-035[ ]D	$2,550	$4,259	3,500	630	31.75	28.75	12.25	90	95
GL*24D-070[ ]D	$4,070	$6,797	7,000	1,260	49.75	28.75	12.25	130	139
GL*34D-105[ ]D	$5,490	$9,168	10,500	1,890	67.75	28.75	12.25	180	193
GL*44D-140[ ]D	$7,110	$11,874	14,000	2,520	85.75	28.75	12.25	240	257
GL*54D-175[ ]D	$8,210	$13,711	17,500	3,150	103.75	28.75	12.25	280	302
GL*64D-210[ ]D	$9,360	$15,631	21,000	3,780	121.75	28.75	12.25	330	356

** Review technical bulletin for use of 'D' for DOE / NRCan compliant model or 'A' for non-regulated.*

Dual Speed EC motors are standard; include price adder for Variable Speed EC 'V' motors.

[ ] Refrigerant letter. Include price adder for circuiting with 'B' - glycol / brine.

NOTE: Not For Use Below +20° F Room Temperature

- Models shown can be applied for non-regulated applications without controls.
- Confirm AWEF for refrigerant being applied and select Variable Speed motor if required.
- Controls for Dual Speed or Variable Speed are not included in unit pricing shown.
- Select from controls options on Unit Cooler Accessories.
- Capacities shown reflect midpoint evaporating temperature.

Prices, product availability, and specifications are subject to change without notice.

GH / GL PRODUCT DESCRIPTION - LOW VELOCITY CENTER MOUNT MODELS

Version: August 2025

GH / GL MODEL - Gas Defrost, Medium Temperature, Low Velocity

GENTLE AIR - 18" HIGH SILHOUETTE

MODEL	LIST PRICE BY DEFROST TYPE						CAPACITY (BTU/H) @ 10° F TD +25° F Evap	AIR FLOW (CFM)	SHIP WGT (LB)	
	(F)#	(H)#	(M)##	(P)##	(M)##	(P)##			EXCEPT REFRIGERANT 'H'	REFRIGERANT 'H'
			EXCEPT REFRIGERANT 'H'		REFRIGERANT 'H'					
GH*16( )-060[ ]D	$2,860	$3,100	$3,030	$3,350	$5,060	$5,595	6,000	900	130	140
GH*26( )-130[ ]D	$4,670	$5,080	$4,940	$5,310	$8,250	$8,868	13,000	1,800	180	197
GH*36( )-198[ ]D	$6,510	$7,040	$6,760	$7,310	$11,289	$12,208	19,800	2,700	240	265
GH*46( )-270[ ]D	$7,860	$8,490	$8,130	$8,760	$13,577	$14,629	27,000	3,600	320	352
GH*56( )-340[ ]D	$9,320	$10,050	$9,590	$10,320	$16,015	$17,234	34,000	4,500	370	409
GH*66( )-410[ ]D	$10,760	$11,610	$11,030	$11,870	$18,420	$19,823	41,000	5,400	420	467
GH*14( )-050[ ]D	$2,760	$2,990	$3,010	$3,240	$5,027	$5,411	5,000	940	120	130
GH*24( )-100[ ]D	$4,580	$4,940	$4,840	$5,200	$8,083	$8,684	10,000	1,880	170	187
GH*34( )-150[ ]D	$6,390	$6,900	$6,670	$7,160	$11,139	$11,957	15,000	2,820	230	255
GH*44( )-200[ ]D	$7,740	$8,370	$8,000	$8,630	$13,360	$14,412	20,000	3,760	310	342
GH*54( )-250[ ]D	$9,200	$9,930	$9,470	$10,050	$15,815	$16,784	25,500	4,700	360	399
GH*64( )-300[ ]D	$10,670	$11,490	$10,930	$11,760	$18,253	$19,639	30,000	5,640	410	457

GENTLE AIR - 12" LOW SILHOUETTE

MODEL	LIST PRICE BY DEFROST TYPE						CAPACITY (BTU/H) @ 10° F TD +25° F Evap	AIR FLOW (CFM)	SHIP WGT (LB)	
	(F)#	(H)#	(M)##	(P)##	(M)##	(P)##			EXCEPT REFRIGERANT 'H'	REFRIGERANT 'H'
			EXCEPT REFRIGERANT 'H'		REFRIGERANT 'H'					
GL*16( )-045[ ]D	$2,450	$2,650	$2,700	$2,900	$4,509	$4,843	4,500	600	100	105
GL*26( )-090[ ]D	$3,870	$4,180	$4,150	$4,440	$6,931	$7,415	9,000	1,200	140	149
GL*36( )-135[ ]D	$5,220	$5,630	$5,480	$5,890	$9,152	$9,836	13,500	1,800	190	203
GL*46( )-180[ ]D	$6,760	$7,280	$7,020	$7,530	$11,723	$12,575	18,000	2,300	250	267
GL*56( )-225[ ]D	$7,810	$8,410	$8,070	$8,670	$13,477	$14,479	22,500	3,000	290	312
GL*66( )-268[ ]D	$8,910	$9,570	$9,170	$9,820	$15,314	$16,399	26,800	3,600	340	366
GL*14( )-035[ ]D	$2,380	$2,580	$2,640	$2,850	$4,409	$4,760	3,500	630	90	95
GL*24( )-070[ ]D	$3,820	$4,180	$4,070	$4,390	$6,797	$7,331	7,000	1,260	130	139
GL*34( )-105[ ]D	$5,170	$5,630	$5,430	$5,820	$9,068	$9,719	10,500	1,890	180	193
GL*44( )-140[ ]D	$6,680	$7,190	$6,950	$7,460	$11,607	$12,458	14,000	2,520	240	257
GL*54( )-175[ ]D	$7,750	$8,320	$8,010	$8,590	$13,377	$14,345	17,500	3,150	280	302
GL*64( )-210[ ]D	$8,820	$9,460	$9,080	$9,720	$15,164	$16,232	21,000	3,780	330	356

GENTLE AIR - 18" HIGH SILHOUETTE AND 12" LOW SILHOUETTE

MODEL	DIMENSIONS (IN)		
	L	W	H
All gas defrost GH and GL 1-fan models	31.75	28.75	12.25
All gas defrost GH and GL 2-fan models	49.75	28.75	12.25
All gas defrost GH and GL 3-fan models	67.75	28.75	12.25
All gas defrost GH and GL 4-fan models	85.75	28.75	12.25
All gas defrost GH and GL 5-fan models	103.75	28.75	12.25
All gas defrost GH and GL 6-fan models	121.75	28.75	12.25

 # F, H defrost types not available for CO2 (C and H) refrigerant.

M, P defrost types not available for C refrigerant. For H refrigerant will be available soon.

**Review technical bulletin for use of 'D' for DOE / NRCan compliant model or 'A' for non-regulated.*

Dual Speed EC motors are standard; include price adder for Variable Speed EC 'V' motors.

[ ] Refrigerant letter. Include price adder for circuiting with 'B' - glycol / brine.

Available Defrost of Types

(H) = HGE 3 Pipe Hot Gas with Electric Pan Heat - No defrost termination or fan delay, +20° F or warmer room temperature.
(F) = HG 3 Pipe Hot Gas with No Pan Heat - No defrost termination or fan delay, +32° F or warmer room temperature.
(P) = KGE 2 Pipe Koolgas with Electric Pan Heat, +20° F or warmer room temperature.
(M) = KG 2 Pipe Koolgas with No Pan Heat, +32° F or warmer room temperature.

- Models shown can be applied for non-regulated applications without controls.
- Confirm AWEF for refrigerant being applied and select Variable Speed motor if required.
- Controls for Dual Speed or Variable Speed are not included in unit pricing shown.
- Select from controls options on Unit Cooler Accessories.
- Capacities shown reflect midpoint evaporating temperature.

Prices, product availability, and specifications are subject to change without notice.

KR PRODUCT DESCRIPTION - COMPACT SERIES LOW PROFILE EVAPORATORS

Version: August 2025

KR MODEL KEY

KR	D	2	6	A	-	125	T	D	A	A

Unit Type

KR - Compact Series

DOE Application

D - DOE and NRCan
A - Non-Regulated

Number of Fans

Fin Spacing

4, 6 FPI

Type of Defrost

A - Air Defrost
E - Electric Defrost with Electric Pan Heat
G - 3 Pipe Hot Gas with Gas Pan Heat #
H - 3 Pipe Hot Gas with Electric Pan Heat #
K - 2 Pipe Koolgas with Gas Pan Heat ##
P - 2 Pipe Koolgas with Electric Pan Heat ##
R - Heat Reclaim #

Refrigerant

N - Stock Unit ***
S - R-404A
P - R-507A

G - Stock Unit ****
Q - R-407A
F - R-407F
T - R-448A
R - R-449A

B - Glycol / Brine
C - CO_2 (standard pressure)
H - CO_2 (high pressure)

BTU/H in Hundreds (00)

Motor Type

D - Dual Speed EC
V - Variable Speed EC
B - PSC Motors **

Motor Voltage

A - 208-230/1/60
B - 115/1/60

Heater Voltage

A - 208-230/1/60
B - 115/1/60 *
K - 208-230/3/60

The KR Low Profile Evaporators are certified under NOM-012-ENER-2019 Standard: Energy efficiency of condenser and evaporator units for refrigeration application in Mexico.

* Available on pan heaters for "H" and "P" defrost options only.
** PSC motors are not allowed in USA or Canada for any evaporator solution and few selected models in Mexico (check with your sales representative for the models).
** 'N' Stock Units are for non-glide or glide refrigerants (consult I/O manual for complete refrigerant listing).
*** 'G' Stock Units are for glide refrigerants only (consult I/O manual for complete refrigerant listing).
# G, H, R defrost types not available for CO_2 (C or H) refrigerant.
K, P defrost types not available for C refrigerant, H refrigerant will be available soon.

DOE / NRCan -

The KR Series is constructed for ease of maintenance with testing and options to meet efficiency required by DOE and NRCan regulations.

Prices, product availability, and specifications are subject to change without notice.

KR PRODUCT DESCRIPTION - COMPACT SERIES LOW PROFILE EVAPORATORS

Version: August 2025

KR MODEL - Air Defrost, Medium Temperature

AIR DEFROST - MEDIUM TEMPERATURE

MODEL	LIST PRICE		CAPACITY (BTU/H) @ 10° F TD +25° F Evap	AIR FLOW (CFM)	DIMENSIONS (IN)			SHIP WGT (LB)	
	EXCEPT REFRIGERANT 'H'	REFRIGERANT 'H'			L	W	H	EXCEPT REFRIGERANT 'H'	REFRIGERANT 'H'
KR*16A-040[ ]D	$1,310	$2,188	4,000	845	29.13	15.32	15.90	55	57
KR*16A-060[ ]D	$1,480	$2,472	6,000	845	29.13	15.32	15.90	60	64
KR*26A-089[ ]D	$2,270	$3,791	8,900	1,690	47.13	15.32	15.90	100	104
KR*26A-125[ ]D	$2,640	$4,409	12,500	1,690	47.13	15.32	15.90	100	106
KR*36A-134[ ]D	$3,120	$5,210	13,400	2,535	65.13	15.32	15.90	120	126
KR*36A-170[ ]D	$3,710	$6,196	17,000	2,535	65.13	15.32	15.90	140	149
KR*46A-216[ ]D	$4,640	$7,749	21,600	3,380	83.13	15.32	15.90	180	192
KR*56A-242[ ]D	$5,360	$8,951	24,200	4,225	101.13	15.32	15.90	220	235
KR*66A-340[ ]D	$6,840	$11,423	34,000	5,070	119.13	15.32	15.90	265	283
KR*14A-058[ ]D	$1,350	$2,255	5,800	855	29.13	15.32	15.90	60	65
KR*24A-096[ ]D	$2,420	$4,041	9,600	1,750	47.13	15.32	15.90	90	96
KR*24A-117[ ]D	$2,550	$4,259	11,700	1,710	47.13	15.32	15.90	100	109
KR*34A-143[ ]D	$3,100	$5,177	14,300	2,625	65.13	15.32	15.90	125	134
KR*34A-173[ ]D	$3,620	$6,045	17,300	2,565	65.13	15.32	15.90	140	152
KR*44A-191[ ]D	$4,380	$7,315	19,100	3,500	83.13	15.32	15.90	165	177
KR*44A-232[ ]D	$4,660	$7,782	23,200	3,420	83.13	15.32	15.90	180	196
KR*54A-290[ ]D	$5,720	$9,552	29,000	4,275	101.13	15.32	15.90	225	245
KR*64A-348[ ]D	$6,780	$11,323	34,800	5,130	119.13	15.32	15.90	265	288

** Review technical bulletin for use of 'D' for DOE / NRCan compliant model or 'A' for non-regulated.*
Dual Speed EC motors are standard; include price adder for Variable Speed EC 'V' motors.
[ ] Refrigerant letter. Include price adder for circuiting with 'B' - glycol / brine.

KR MODEL OPTIONS

NUMBER OF FANS	VARIABLE SPEED EC MOTOR ADDER [1]	PSC MOTOR DEDUCT *	REVERSE AIR FLOW DIRECTION	ELECTROFIN (AIR OR GAS DEFROST ONLY)	COPPER FIN	PAINTED CABINET WHITE / BLACK	GLYCOL CIRCUITING ADDER
1	$360	($10)	$100	$1,550	$390	$330	$290
2	$380	($20)	$190	$1,550	$780	$330	$290
3	$400	($30)	$280	$1,550	$1,170	$460	$290
4	$420	($40)	$380	$1,550	$1,550	$460	$290
5	$440	($50)	$470	$1,550	$1,940	$460	$290
6	$460	($60)	$570	$1,850	$2,330	$540	$290

NUMBER OF FANS	LONG THROW ADAPTERS	INSULATED ALUMINUM DRAIN PAN	SS LONG THROW ADAPTERS	SS DRAIN PAN (ONLY) **	SS HOUSING AND SS DRAIN PAN **
1	$90	$490	$390	$350	$910
2	$180	$620	$780	$540	$1,270
3	$270	$760	$1,170	$610	$1,430
4	$360	$900	$1,560	$720	$1,730
5	$450	$1,050	$1,950	$780	$2,080
6	$540	$1,200	$2,340	$800	$2,370

[1] Variable Speed EC Motor Adder includes built-in signal amplifier list price.
*** Standard non-insulated drain pan in stainless steel. Insulated drain pan is aluminum only.*

- DOE / NRCan models are shown and can be applied for non-regulated applications without controls.
- Confirm AWEF for refrigerant being applied and select Variable Speed motor if required.
- Controls for Dual Speed or Variable Speed are not included in unit pricing shown.
- Select from controls options on Unit Cooler Accessories.
- Capacities shown reflect midpoint evaporating temperature.

*** PSC MOTORS ARE NOT ALLOWED IN THE US AND CANADA FOR DIRECT EXPANSION APPLICATIONS. DO NOT CHOOSE THIS DEDUCT FOR UNITS SHIPPING TO THESE LOCATIONS.**

Prices, product availability, and specifications are subject to change without notice.

KR PRODUCT DESCRIPTION - COMPACT SERIES LOW PROFILE EVAPORATORS

Version: August 2025

KR MODEL - Electric Defrost, Low / Medium Temperature

ELECTRIC DEFROST - LOW / MEDIUM TEMPERATURE

MODEL	LIST PRICE		CAPACITY (BTU/H) @ 10° F TD		AIR FLOW (CFM)	DIMENSIONS (IN)			SHIP WGT (LB)	
	EXCEPT REFRIGERANT 'H'	REFRIGERANT 'H'	-20° F Evap	+20° F Evap		L	W	H	EXCEPT REFRIGERANT 'H'	REFRIGERANT 'H'
KR*14E-037[ ]D	$1,660	$2,772	3,700	5,000	875	29.13	15.32	15.90	55	59
KR*24E-074[ ]D	$3,080	$5,144	7,400	9,990	1,750	47.13	15.32	15.90	90	96
KR*34E-111[ ]D	$4,280	$7,148	11,100	14,990	2,625	65.13	15.32	15.90	125	134
KR*44E-148[ ]D	$5,670	$9,469	14,800	19,850	3,500	83.13	15.32	15.90	165	177
KR*54E-185[ ]D	$7,140	$11,924	18,500	24,980	4,375	101.13	15.32	15.90	200	215
KR*64E-220[ ]D	$8,160	$13,627	22,000	29,700	5,250	119.13	15.32	15.90	240	258
KR*16E-035[ ]D	$1,880	$3,140	3,500	4,730	845	29.13	15.32	15.90	55	57
KR*16E-045[ ]D	$2,080	$3,474	4,500	6,080	845	29.13	15.32	15.90	60	64
KR*26E-090[ ]D	$3,110	$5,194	9,000	12,150	1,690	47.13	15.32	15.90	100	106
KR*36E-135[ ]D	$4,430	$7,398	13,500	18,230	2,535	65.13	15.32	15.90	140	149
KR*46E-180[ ]D	$5,930	$9,903	18,000	24,300	3,380	83.13	15.32	15.90	180	192
KR*56E-192[ ]D	$6,630	$11,072	19,200	25,920	4,225	101.13	15.32	15.90	220	235
KR*66E-270[ ]D	$8,470	$14,145	27,000	36,450	5,070	119.13	15.32	15.90	265	283

** Review technical bulletin for use of 'D' for DOE / NRCan compliant model or 'A' for non-regulated.*
Dual Speed EC motors are standard; include price adder for Variable Speed EC 'V' motors.
[ ] Refrigerant letter. Include price adder for circuiting with 'B' - glycol / brine.

- DOE / NRCan models are shown and can be applied for non-regulated applications without controls.
- Confirm AWEF for refrigerant being applied and select Variable Speed motor if required.
- Controls for Dual Speed or Variable Speed are not included in unit pricing shown.
- Select from controls options on Unit Cooler Accessories.
- Capacities shown reflect midpoint evaporating temperature.

Prices, product availability, and specifications are subject to change without notice.

KR PRODUCT DESCRIPTION - COMPACT SERIES LOW PROFILE EVAPORATORS

Version: August 2025

KR MODEL - Gas Defrost, Low / Medium Temperature

GAS DEFROST - LOW / MEDIUM TEMPERATURE

MODEL	LIST PRICE BY DEFROST TYPE						CAPACITY (BTU/H) @ 10° F TD		AIR FLOW (CFM)	SHIP WGT (LB)	
	(G)#	(H)#	(K)##	(P)##	(K)##	(P)##	-20° F Evap	+20° F Evap		EXCEPT REFRIGERANT 'H'	REFRIGERANT 'H'
			EXCEPT REFRIGERANT 'H'		REFRIGERANT 'H'						
KR*14( )-037[ ]D	$2,090	$1,670	$2,300	$1,800	$3,841	$3,006	3,700	5,000	875	55	59
KR*24( )-074[ ]D	$3,760	$3,000	$4,120	$3,210	$6,880	$5,361	7,400	9,990	1,750	90	96
KR*34( )-111[ ]D	$4,190	$3,420	$4,580	$3,630	$7,649	$6,062	11,100	14,990	2,625	125	134
KR*44( )-148[ ]D	$5,470	$4,460	$5,960	$4,740	$9,953	$7,916	14,800	19,850	3,500	165	177
KR*54( )-185[ ]D	$6,770	$5,520	$7,370	$5,860	$12,308	$9,786	18,500	24,980	4,375	200	215
KR*64( )-220[ ]D	$7,930	$6,480	$8,630	$6,870	$14,412	$11,473	22,000	29,700	5,250	240	258
KR*16( )-035[ ]D	$2,190	$1,740	$2,420	$1,880	$4,041	$3,140	3,500	4,730	845	55	57
KR*16( )-045[ ]D	$2,570	$2,030	$2,840	$2,180	$4,743	$3,641	4,500	6,080	845	60	64
KR*26( )-090[ ]D	$3,930	$3,150	$4,310	$3,350	$7,198	$5,595	9,000	12,150	1,690	100	106
KR*36( )-135[ ]D	$4,480	$3,640	$4,910	$3,890	$8,200	$6,496	13,500	18,230	2,535	140	149
KR*46( )-180[ ]D	$5,790	$4,700	$6,320	$5,010	$10,554	$8,367	18,000	24,300	3,380	180	192
KR*56( )-192[ ]D	$6,550	$5,480	$7,090	$5,780	$11,840	$9,653	19,200	25,920	4,225	220	235
KR*66( )-270[ ]D	$8,090	$6,590	$8,810	$7,010	$14,713	$11,707	27,000	36,450	5,070	265	283

MODEL	DIMENSIONS (IN)		
	L	W	H
All gas defrost 1-fan KR models	29.13	15.32	15.90
All gas defrost 2-fan KR models	47.13	15.32	15.90
All gas defrost 3-fan KR models	65.13	15.32	15.90
All gas defrost 4-fan KR models	83.13	15.32	15.90
All gas defrost 5-fan KR models	101.13	15.32	15.90
All gas defrost 6-fan KR models	119.13	15.32	15.90

 # G, H defrost types not available for CO2 (C and H) refrigerant.
K, P defrost types not available for C refrigerant. For H refrigerant will be available soon.
** Review technical bulletin for use of 'D' for DOE / NRCan compliant model or 'A' for non-regulated.*
Dual Speed EC motors are standard; include price adder for Variable Speed EC 'V' motors.
[ ] Refrigerant letter. Include price adder for circuiting with 'B' - glycol / brine.

Available Types of Defrost
(H) = HGE 3 Pipe Hot Gas with Electric Pan Heat - No defrost termination or fan delay
(G) = HGG 3 Pipe Hot Gas with Gas Pan Heat - No defrost termination or fan delay
(P) = KGE 2 Pipe Koolgas with Electric Pan Heat
(K) = KGG 2 Pipe Koolgas with Gas Pan Heat

- DOE / NRCan models are shown and can be applied for non-regulated applications without controls.
- Confirm AWEF for refrigerant being applied and select Variable Speed motor if required.
- Controls for Dual Speed or Variable Speed are not included in unit pricing shown.
- Select from controls options on Unit Cooler Accessories.
- Capacities shown reflect midpoint evaporating temperature.

Prices, product availability, and specifications are subject to change without notice.

MK / MV PRODUCT DESCRIPTION - MEDIUM PROFILE EVAPORATORS

Version: August 2025

MK / MV MODEL KEY

MK	D	2	6	E	-	152	T	V	A	A

Unit Type
MK - Medium Profile
MV - High Velocity

DOE Application
D - DOE and NRCan
A - Non-Regulated

Number of Fans

Fin Spacing
4, 6, 8 FPI

Type of Defrost
A - Air Defrost
E - Electric Defrost w/Electric Pan Heat
G - 3 Pipe Hot Gas w/Gas Pan Heat#
H - 3 Pipe Hot Gas w/Electric Pan Heat#
K - 2 Pipe Koolgas w/Gas Pan Heat##
P - 2 Pipe Koolgas w/Electric Pan Heat##
R - Heat Reclaim#

Heater Voltage
A - 208-230/1/60
B - 115/1/60 ****
K - 208-230/3/60
M - 460/3/60

Motor Voltage
A - 208-230/1/60
B - 115/1/60
K - 208-230/3/60 *
H - 460/1/60 ###
M - 460/3/60 ###

Motor Type***
V - Variable Speed EC
D - Variable Speed EC, Dual Speed Control

Refrigerant
N - Stock Unit ******
S - R-404A
P - R-507A
G - Stock Unit *******
Q - R-407A
T - R-448A
F - R-407F
R - R-449A
B - Glycol / Brine
C - CO_2 (standard pressure)
H - CO_2 (high pressure)

BTU/H in Hundreds (00)

* Single phase motors wired for 3 phase operation. Not available on single fan units.

**** Available on pan heaters for "H" and "P" defrost options only.

****** 'N' Stock Units are for non-glide or glide refrigerants (consult I/O manual for complete refrigerant listing).

******* 'G' Stock Units are for glide refrigerants only (consult I/O manual for complete refrigerant listing).

 # G, H, and R defrost types not available for CO_2 (C or H) refrigerant.

K and P defrost types not available for C refrigerant, H refrigerant will be available soon.

460 V not available for D motor type.

DOE / NRCan -

The MK / MV Series is constructed for ease of maintenance with testing and options to meet efficiency required by DOE and NRCan regulations.

Prices, product availability, and specifications are subject to change without notice.

MK / MV PRODUCT DESCRIPTION - MEDIUM PROFILE EVAPORATORS

Version: August 2025

MK / MV MODEL - Air Defrost, Medium Temperature

AIR DEFROST - MEDIUM TEMPERATURE

MODEL	LIST PRICE		CAPACITY (BTU/H) @ 10° F TD +25° F Evap	AIR FLOW (CFM)	DIMENSIONS (IN)			SHIP WGT (LB)	
	EXCEPT REFRIGERANT 'H'	REFRIGERANT 'H'			L	W	H	EXCEPT REFRIGERANT 'H'	REFRIGERANT 'H'
MK*18A-133[ ]V	$3,090	$5,160	13,300	2,710	38.00	19.00	26.75	125	134
MK*18A-160[ ]V	$3,180	$5,311	16,000	2,625	38.00	19.00	26.75	130	142
MK*28A-266[ ]V	$5,410	$9,035	26,600	5,420	63.00	19.00	26.75	225	242
MK*28A-320[ ]V	$6,430	$10,738	32,000	5,250	63.00	19.00	26.75	240	262
MK*38A-393[ ]V	$9,090	$15,180	39,300	8,130	92.00	19.00	26.75	330	354
MK*38A-480[ ]V	$9,890	$16,516	48,000	7,875	92.00	19.00	26.75	350	382
MK*48A-640[ ]V	$11,820	$19,739	64,000	10,500	119.00	19.00	26.75	470	513
MK*16A-118[ ]V	$2,850	$4,760	11,800	2,815	38.00	19.00	26.75	125	134
MK*16A-145[ ]V	$3,120	$5,210	14,500	2,725	38.00	19.00	26.75	130	142
MK*26A-236[ ]V	$5,190	$8,667	23,600	5,630	63.00	19.00	26.75	225	242
MK*26A-290[ ]V	$6,130	$10,237	29,000	5,450	63.00	19.00	26.75	240	262
MK*36A-354[ ]V	$7,790	$13,009	35,400	8,445	92.00	19.00	26.75	330	354
MK*36A-435[ ]V	$9,500	$15,865	43,500	8,175	92.00	19.00	26.75	350	382
MK*46A-580[ ]V	$11,460	$19,138	58,000	10,900	119.00	19.00	26.75	470	513
MK*14A-094[ ]V	$2,310	$3,858	9,400	3,060	38.00	19.00	26.75	125	134
MK*14A-121[ ]V	$3,030	$5,060	12,100	2,960	38.00	19.00	26.75	130	142
MK*24A-188[ ]V	$4,480	$7,482	18,800	6,120	63.00	19.00	26.75	225	242
MK*24A-242[ ]V	$5,270	$8,801	24,200	5,920	63.00	19.00	26.75	240	262
MK*34A-363[ ]V	$8,170	$13,644	36,300	8,880	92.00	19.00	26.75	350	382
MK*44A-484[ ]V	$10,890	$18,186	48,400	11,840	119.00	19.00	26.75	470	513

** Review technical bulletin for use of 'D' for DOE / NRCan compliant model or 'A' for non-regulated.*

Variable Speed EC motors are standard; specify dual speed control "D."

Variable Speed EC motors are 115 V or 208-230 V power only and use 0-10 V DC control signal.

Dual Speed EC Motors are 115 V or 208-230 V power only and use 10 V DC control signal to operate at minimum speed.

[ ] Refrigerant letter. Include price adder for circuiting with 'B' - glycol / brine.

MK / MV MODEL OPTIONS

NUMBER OF FANS	DUAL SPEED EC MOTOR ADDER*	ELECTROFIN (AIR OR GAS DEFROST ONLY)	COPPER FIN	PAINTED CABINET WHITE / BLACK	LONG THROW ADAPTERS	HEAT RECLAIM, GLYCOL CIRCUITING ADDER
1	$0	$1,550	$850	$720	$240	$290
2	$0	$1,800	$1,700	$720	$480	$290
3	$0	$2,550	$2,550	$860	$720	$290
4	$0	$3,320	$3,400	$910	$960	$290

NUMBER OF FANS	INSULATED ALUMINUM DRAIN PAN	SS LONG THROW ADAPTERS	SS NON-INSULATED DRAIN PAIN (ONLY)	SS INSULATED DRAIN PAN (ONLY)	SS HOUSING AND SS NON-INSULATED DRAIN PAN	SS HOUSING AND SS INSULATED DRAIN PAN
1	$450	$590	$700	$1,390	$1,580	$2,340
2	$570	$1,180	$880	$1,710	$1,960	$2,920
3	$750	$1,770	$1,160	$2,070	$2,680	$3,760
4	$1,200	$2,360	$1,860	$3,150	$3,900	$5,400

- DOE / NRCan models are shown and can be applied for non-regulated applications without controls.
- Confirm AWEF for refrigerant being applied and select Variable Speed motor if required.
- Controls for Dual Speed or Variable Speed are not included in unit pricing shown.
- Select from controls options on Unit Cooler Accessories.
- Capacities shown reflect midpoint evaporating temperature.

Prices, product availability, and specifications are subject to change without notice.

MK / MV PRODUCT DESCRIPTION - MEDIUM PROFILE EVAPORATORS

Version: August 2025

MK / MV MODEL - Electric Defrost, Low / Medium Temperature

ELECTRIC DEFROST - LOW / MEDIUM TEMPERATURE

MODEL	LIST PRICE		CAPACITY (BTU/H) @ 10° F TD		AIR FLOW (CFM)	DIMENSIONS (IN)			SHIP WGT (LB)	
	EXCEPT REFRIGERANT 'H'	REFRIGERANT 'H'	-20° F Evap	+20° F Evap		L	W	H	EXCEPT REFRIGERANT 'H'	REFRIGERANT 'H'
MK*16E-103[ ]V	$3,610	$6,029	10,300	11,800	2,815	38.00	19.00	26.75	125	134
MK*16E-127[ ]V	$3,810	$6,363	12,700	14,500	2,725	38.00	19.00	26.75	130	142
MK*26E-206[ ]V	$6,240	$10,421	20,600	23,600	5,630	63.00	19.00	26.75	225	242
MK*26E-254[ ]V	$7,580	$12,659	25,400	29,000	5,450	63.00	19.00	26.75	240	262
MK*36E-309[ ]V	$9,100	$15,197	30,900	35,400	8,445	92.00	19.00	26.75	330	354
MK*36E-381[ ]V	$10,320	$17,234	38,100	43,500	8,175	92.00	19.00	26.75	350	382
MK*46E-508[ ]V	$12,210	$20,391	50,800	58,000	10,900	119.00	19.00	26.75	470	513
MK*14E-082[ ]V	$3,570	$5,962	8,200	9,400	3,060	38.00	19.00	26.75	125	134
MK*14E-105[ ]V	$3,750	$6,263	10,500	12,100	2,960	38.00	19.00	26.75	130	142
MK*24E-164[ ]V	$6,100	$10,187	16,400	18,800	6,120	63.00	19.00	26.75	225	242
MK*24E-210[ ]V	$7,460	$12,458	21,000	24,200	5,920	63.00	19.00	26.75	240	262
MK*34E-246[ ]V	$8,960	$14,963	24,600	28,200	9,180	92.00	19.00	26.75	330	354
MK*34E-315[ ]V	$10,120	$16,900	31,500	36,300	8,880	92.00	19.00	26.75	350	382
MK*44E-420[ ]V	$11,980	$20,007	42,000	48,400	11,840	119.00	19.00	26.75	470	513

** Review technical bulletin for use of 'D' for DOE / NRCan compliant model or 'A' for non-regulated.*

LOW TEMPERATURE - BELOW +30° F EXTRA HIGH VELOCITY

MODEL	LIST PRICE		CAPACITY (BTU/H) @ 10° F TD		AIR FLOW (CFM)	DIMENSIONS (IN)			SHIP WGT (LB)	
	EXCEPT REFRIGERANT 'H'	REFRIGERANT 'H'	-20° F Evap	+20° F Evap		L	W	H	EXCEPT REFRIGERANT 'H'	REFRIGERANT 'H'
MVA16E-126[ ]V	$4,450	$7,432	12,600	N/A	3,955	38.00	19.00	26.75	125	134
MVA16E-155[ ]V	$5,190	$8,667	15,500	N/A	3,800	38.00	19.00	26.75	130	142
MVA26E-252[ ]V	$7,440	$12,425	25,200	N/A	7,910	63.00	19.00	26.75	225	242
MVA26E-310[ ]V	$8,890	$14,846	31,000	N/A	7,600	63.00	19.00	26.75	240	262
MVA36E-378[ ]V	$10,620	$17,735	37,800	N/A	11,865	92.00	19.00	26.75	330	354
MVA36E-465[ ]V	$12,050	$20,124	46,500	N/A	11,400	92.00	19.00	26.75	350	382
MVA46E-620[ ]V	$14,200	$23,714	62,000	N/A	15,200	119.00	19.00	26.75	470	513
MVA14E-100[ ]V	$4,220	$7,047	10,000	N/A	4,300	38.00	19.00	26.75	125	134
MVA14E-128[ ]V	$4,830	$8,066	12,800	N/A	4,130	38.00	19.00	26.75	130	142
MVA24E-200[ ]V	$7,360	$12,291	20,000	N/A	8,600	63.00	19.00	26.75	225	242
MVA24E-256[ ]V	$8,690	$14,512	25,600	N/A	8,260	63.00	19.00	26.75	240	262
MVA34E-300[ ]V	$10,420	$17,401	30,000	N/A	12,900	92.00	19.00	26.75	330	354
MVA34E-384[ ]V	$11,820	$19,739	38,400	N/A	12,390	92.00	19.00	26.75	350	382
MVA44E-512[ ]V	$13,920	$23,246	51,200	N/A	16,520	119.00	19.00	26.75	470	513

MV models are 'A' for non-regulated applications only.

Variable Speed EC motors are standard; specify dual speed control "D."
Variable Speed EC motors are 115 V or 208-230 V power only and use 0-10 V DC control signal.
Dual Speed EC Motors are 115 V or 208-230 V power only and use 10 V DC control signal to operate at minimum speed.
[ ] Refrigerant letter. Include price adder for circuiting with 'B' - glycol / brine.

- DOE / NRCan models are shown for MK and can be applied for non-regulated applications without controls.
- MV models are for non-regulated options and operates as single speed without controls.
- Confirm AWEF for refrigerant being applied and select Variable or Dual Speed motor as required.
- Controls for Dual Speed or Variable Speed are not included in unit pricing shown.
- Select from controls options on Unit Cooler Accessories.
- Capacities shown reflect midpoint evaporating temperature.

Prices, product availability, and specifications are subject to change without notice.

MK / MV PRODUCT DESCRIPTION - MEDIUM PROFILE EVAPORATORS

Version: August 2025

MK / MV MODEL - Gas Defrost, Low / Medium Temperature

HOT GAS DEFROST - LOW / MEDIUM TEMPERATURE

MODEL	LIST PRICE BY DEFROST TYPE						CAPACITY (BTU/H) @ 10 °F TD		AIR FLOW (CFM)	SHIP WGT (LB)	
	(G)#	(H)#	(K)## EXCEPT REFRIGERANT 'H'	(P)## EXCEPT REFRIGERANT 'H'	(K)## REFRIGERANT 'H'	(P)## REFRIGERANT 'H'	-20° F Evap	+20° F Evap		EXCEPT REFRIGERANT 'H'	REFRIGERANT 'H'
MK*16( )-103[ ]V	$3,750	$3,280	$3,990	$3,540	$6,663	$5,912	10,300	11,800	2,815	125	134
MK*16( )-127[ ]V	$3,940	$3,480	$4,200	$3,730	$7,014	$6,229	12,700	14,500	2,725	130	142
MK*26( )-206[ ]V	$6,560	$5,820	$6,840	$6,080	$11,423	$10,154	20,600	23,600	5,630	225	242
MK*26( )-254[ ]V	$8,100	$7,130	$8,360	$7,380	$13,961	$12,325	25,400	29,000	5,450	240	262
MK*36( )-309[ ]V	$9,740	$8,470	$10,010	$8,750	$16,717	$14,613	30,900	35,400	8,445	330	354
MK*36( )-381[ ]V	$11,090	$9,640	$11,360	$9,900	$18,971	$16,533	38,100	43,500	8,175	350	382
MK*46( )-508[ ]V	$13,140	$11,450	$13,390	$11,710	$22,361	$19,556	50,800	58,000	10,900	470	513
MK*14( )-082[ ]V	$3,580	$3,150	$3,840	$3,400	$6,413	$5,678	8,200	9,400	3,060	125	134
MK*14( )-105[ ]V	$3,770	$3,300	$4,020	$3,560	$6,713	$5,945	10,500	12,100	2,960	130	142
MK*24( )-164[ ]V	$6,280	$5,570	$6,540	$5,830	$10,922	$9,736	16,400	18,800	6,120	225	242
MK*24( )-210[ ]V	$7,760	$6,860	$8,010	$7,110	$13,377	$11,874	21,000	24,200	5,920	240	262
MK*34( )-246[ ]V	$9,320	$8,140	$9,590	$8,400	$16,015	$14,028	24,600	28,200	9,180	330	354
MK*34( )-315[ ]V	$10,620	$9,240	$10,880	$9,480	$18,170	$15,832	31,500	36,300	8,880	350	382
MK*44( )-420[ ]V	$12,580	$10,970	$12,830	$11,240	$21,426	$18,771	42,000	48,400	11,840	470	513

MODEL	DIMENSIONS (IN)		
	L	W	H
All gas defrost 1-fan MK models	38.00	19.00	26.75
All gas defrost 2-fan MK models	63.00	19.00	26.75
All gas defrost 3-fan MK models	63.00	19.00	26.75
All gas defrost 4-fan MK models	92.00	19.00	26.75
All gas defrost 5-fan MK models	92.00	19.00	26.75
All gas defrost 6-fan MK models	119.00	19.00	26.75

 # G, H defrost types not available for CO2 (C and H) refrigerant.

K, P defrost types not available for C refrigerant. For H refrigerant will be available soon.

** Review technical bulletin for use of 'D' for DOE / NRCan compliant model or 'A' for non-regulated.*

Variable Speed EC motors are standard; specify dual speed control "D."
Variable Speed EC motors are 115 V or 208-230 V power only and use 0-10 V DC control signal.
Dual Speed EC Motors are 115 V or 208-230 V power only and use 10 V DC control signal to operate at minimum speed.[ ] Refrigerant letter. Include price adder for circuiting with 'B' - glycol / brine.

Available Types of Defrost
(H) = HGE 3 Pipe Hot Gas with Electric Pan Heat - No defrost termination or fan delay
(G) = HGG 3 Pipe Hot Gas with Gas Pan Heat - No defrost termination or fan delay
(P) = KGE 2 Pipe Koolgas with Electric Pan Heat
(K) = KGG 2 Pipe Koolgas with Gas Pan Heat

- DOE / NRCan models are shown and can be applied for non-regulated applications without controls.
- Confirm AWEF for refrigerant being applied and select Variable or Dual Speed motor as required.
- Controls for Dual Speed or Variable Speed are not included in unit pricing shown.
- Select from controls options on Unit Cooler Accessories.
- Capacities shown reflect midpoint evaporating temperature.

Prices, product availability, and specifications are subject to change without notice.

MS PRODUCT DESCRIPTION - MEDIUM PROFILE EVAPORATORS

Version: August 2025

MS MODEL KEY

MS	A	2	6	E	-	0390	T	C	K	K

Unit Type

MS - Super Cooler

DOE Application

D - DOE and NRCan
A - Non-Regulated

Number of Fans

Fin Spacing

4, 5, 6, 7 FPI

Type of Defrost

A - Air Defrost
E - Electric Defrost w/Electric Pan Heat
G - 3 Pipe Hot Gas w/Gas Pan Heat#
H - 3 Pipe Hot Gas w/Electric Pan Heat#
K - 2 Pipe Koolgas w/Gas Pan Heat##
P - 2 Pipe Koolgas w/Electric Pan Heat##
R - Heat Reclaim#

Heater Voltage

A - 208-230/1/60
K - 208-230/3/60
L - 380/3/60*
M - 460/3/60
P - 575/3/60
U - 380/3/50

Motor Voltage

A - 208-230/1/60
B - 115/1/60
K - 208-230/3/60
L - 380/3/60*
M - 460/3/60
P - 575/3/60
U - 380/3/50

Motor Type

C - 3 Phase Motors**
V - Variable Speed EC***
D - Variable Speed EC, Dual Speed Control

Refrigerant

N - Stock Unit****
S - R-404A
P - R-507A

G - Stock Unit*****
Q - R-407A
F - R-407F
T - R-448A
R - R-449A

B - Glycol / Brine
H - CO_2 (high pressure)

BTU/H in Hundreds (00)

* Contact Application Engineering or quoting.

** Inverter suitable motor for K, M, P, and U voltages.

*** Single phase motor available in motor voltage: 115/1/60, 208-230/1/60, and 208-230/3/60 (with two or more fans). **DOE or NRCan** applications use Variable Speed motors with Dual Speed or Variable Speed control.

**** **'N' Stock Units** are for non-glide or glide refrigerants (consult I/O manual for complete refrigerant listing).

***** **'G' Stock Units** are for glide refrigerants only (consult I/O manual for complete refrigerant listing)

 # G, H, and R defrost types not available for CO2 (C and H) refrigerant.

K and P defrost types not available for C refrigerant, H refrigerant will be available soon.

DOE / NRCan -

The MS Series is constructed for ease of maintenance with testing and options to meet efficiency required by DOE and NRCan regulations.

Prices, product availability, and specifications are subject to change without notice.

MS PRODUCT DESCRIPTION - MEDIUM PROFILE EVAPORATORS

Version: August 2025

MS MODEL - Air Defrost, Medium Temperature

AIR DEFROST - MEDIUM TEMPERATURE

MODEL	LIST PRICE		CAPACITY (BTU/H) @ 10° F TD +25° F Evap	AIR FLOW (CFM)	DIMENSIONS (IN)			SHIP WGT (LB)	
	EXCEPT REFRIGERANT 'H'	REFRIGERANT 'H'			L	W	H	EXCEPT REFRIGERANT 'H'	REFRIGERANT 'H'
MS*14A-0150[ ]C	$3,610	$9,025	15,020	4,200	57.00	26.63	26.25	142	165
MS*14A-0190[ ]C	$4,420	$11,050	19,030	4,120	57.00	26.63	26.25	153	184
MS*14A-0225[ ]C	$5,010	$12,525	22,470	4,000	57.00	26.63	26.25	171	210
MS*14A-0249[ ]C	$5,550	$13,875	24,910	3,920	57.00	26.63	26.25	184	231
MS*16A-0184[ ]C	$3,750	$9,375	18,360	4,120	57.00	26.63	26.25	151	174
MS*16A-0229[ ]C	$4,550	$11,375	22,940	4,040	57.00	26.63	26.25	164	195
MS*16A-0260[ ]C	$5,180	$12,950	26,010	3,940	57.00	26.63	26.25	182	221
MS*16A-0281[ ]C	$5,740	$14,350	28,100	3,850	57.00	26.63	26.25	197	244
MS*17A-0199[ ]C	$3,800	$9,500	19,880	4,080	57.00	26.63	26.25	161	184
MS*17A-0246[ ]C	$4,640	$11,600	24,590	4,000	57.00	26.63	26.25	174	205
MS*17A-0275[ ]C	$5,270	$13,175	27,500	3,900	57.00	26.63	26.25	194	233
MS*17A-0295[ ]C	$5,850	$14,625	29,540	3,800	57.00	26.63	26.25	209	256
MS*24A-0300[ ]C	$6,050	$15,125	30,040	8,400	102.00	26.63	26.25	247	291
MS*24A-0381[ ]C	$7,690	$19,225	38,050	8,240	102.00	26.63	26.25	272	330
MS*24A-0450[ ]C	$8,670	$21,675	44,950	8,000	102.00	26.63	26.25	301	374
MS*24A-0498[ ]C	$9,370	$23,425	49,820	7,840	102.00	26.63	26.25	326	414
MS*26A-0367[ ]C	$6,230	$15,575	36,710	8,240	102.00	26.63	26.25	269	313
MS*26A-0459[ ]C	$7,930	$19,825	45,880	8,080	102.00	26.63	26.25	297	355
MS*26A-0520[ ]C	$8,940	$22,350	52,030	7,880	102.00	26.63	26.25	328	401
MS*26A-0562[ ]C	$9,650	$24,125	56,190	7,700	102.00	26.63	26.25	355	443
MS*27A-0398[ ]C	$6,360	$15,900	39,760	8,160	102.00	26.63	26.25	309	353
MS*27A-0492[ ]C	$8,090	$20,225	49,180	8,000	102.00	26.63	26.25	342	400
MS*27A-0550[ ]C	$9,100	$22,750	55,000	7,800	102.00	26.63	26.25	370	443
MS*27A-0591[ ]C	$9,840	$24,600	59,080	7,600	102.00	26.63	26.25	419	507
MS*34A-0524[ ]C	$10,430	$26,075	52,400	12,135	129.00	26.63	26.25	369	444
MS*34A-0623[ ]C	$11,830	$29,575	62,250	11,505	129.00	26.63	26.25	402	495
MS*34A-0708[ ]C	$12,610	$31,525	70,820	11,325	129.00	26.63	26.25	433	545
MS*36A-0626[ ]C	$10,750	$26,875	62,610	11,895	129.00	26.63	26.25	402	477
MS*36A-0712[ ]C	$12,200	$30,500	71,180	11,040	129.00	26.63	26.25	438	531
MS*36A-0806[ ]C	$13,010	$32,525	80,620	10,995	129.00	26.63	26.25	472	584
MS*37A-0663[ ]C	$10,990	$27,475	66,340	11,700	129.00	26.63	26.25	419	494
MS*37A-0755[ ]C	$12,960	$32,400	75,540	10,995	129.00	26.63	26.25	456	549
MS*37A-0849[ ]C	$13,270	$33,175	84,870	10,905	129.00	26.63	26.25	492	604
MS*44A-0699[ ]C	$13,610	$34,025	69,870	16,180	168.00	26.63	26.25	493	591
MS*44A-0830[ ]C	$14,740	$36,850	83,000	15,340	168.00	26.63	26.25	528	651
MS*44A-0944[ ]C	$16,200	$40,500	94,430	15,100	168.00	26.63	26.25	578	726
MS*46A-0835[ ]C	$14,030	$35,075	83,480	15,860	168.00	26.63	26.25	538	636
MS*46A-0949[ ]C	$15,190	$37,975	94,900	14,720	168.00	26.63	26.25	576	699
MS*46A-1075[ ]C	$16,730	$41,825	107,490	14,660	168.00	26.63	26.25	630	778
MS*47A-0885[ ]C	$14,320	$35,800	88,450	15,600	168.00	26.63	26.25	560	658
MS*47A-1007[ ]C	$15,540	$38,850	100,720	14,660	168.00	26.63	26.25	600	723
MS*47A-1132[ ]C	$17,120	$42,800	113,170	14,540	168.00	26.63	26.25	656	804

** Review technical bulletin for use of 'D' for DOE / NRCan compliant model or 'A' for non-regulated.*
3 phase motors for use in non-regulated applications are standard. Include price adder with Variable Speed or Dual Speed.
Variable Speed EC motors are 115 V or 208-230 V power only and use 0-10 V DC control signal.
Dual Speed EC Motors are 115 V or 208-230 V power only and use 10 V DC control signal to operate at minimum speed.
[ ] Refrigerant letter. Include price adder for circuiting with 'B' - glycol.

- Non-regulated models are shown with single speed 3 phase motors.
- Confirm AWEF for refrigerant being applied and select Variable or Dual Speed motor as required.
- Controls for Dual Speed or Variable Speed are not included in unit pricing shown.
- Select from controls options on Unit Cooler Accessories.
- Capacities shown reflect midpoint evaporating temperature.

Prices, product availability, and specifications are subject to change without notice.

MS PRODUCT DESCRIPTION - MEDIUM PROFILE EVAPORATORS

Version: August 2025

MS MODEL - Electric Defrost, Low / Medium Temperature

ELECTRIC DEFROST - LOW / MEDIUM TEMPERATURE

MODEL	LIST PRICE		CAPACITY (BTU/H) @ 10°F TD		AIR FLOW (CFM)	DIMENSIONS (IN)			SHIP WGT (LB)	
	EXCEPT REFRIGERANT 'H'	REFRIGERANT 'H'	-20°F Evap	+20°F Evap		L	W	H	EXCEPT REFRIGERANT 'H'	REFRIGERANT 'H'
MS*14E-0162[ ]C	$5,150	$12,875	16,180	19,030	4,120	57.00	26.63	26.25	174	205
MS*14E-0212[ ]C	$6,360	$15,900	21,170	24,910	3,920	57.00	26.63	26.25	208	255
MS*15E-0178[ ]C	$5,220	$13,050	17,790	20,930	4,060	57.00	26.63	26.25	186	217
MS*15E-0223[ ]C	$6,470	$16,175	22,260	26,190	3,890	57.00	26.63	26.25	221	268
MS*16E-0195[ ]C	$5,300	$13,250	19,500	22,940	4,040	57.00	26.63	26.25	198	229
MS*16E-0239[ ]C	$6,540	$16,350	23,890	28,100	3,850	57.00	26.63	26.25	236	283
MS*24E-0323[ ]C	$10,920	$27,300	32,340	38,050	8,240	102.00	26.63	26.25	297	355
MS*24E-0424[ ]C	$11,970	$29,925	42,350	49,820	7,840	102.00	26.63	26.25	357	445
MS*25E-0356[ ]C	$11,090	$27,725	35,580	41,860	8,120	102.00	26.63	26.25	317	375
MS*25E-0444[ ]C	$12,180	$30,450	44,450	52,290	7,780	102.00	26.63	26.25	381	469
MS*26E-0390[ ]C	$11,260	$28,150	39,000	45,880	8,080	102.00	26.63	26.25	337	395
MS*26E-0478[ ]C	$12,350	$30,875	47,760	56,190	7,700	102.00	26.63	26.25	406	494
MS*34E-0445[ ]C	$12,770	$31,925	44,540	52,400	12,135	129.00	26.63	26.25	398	473
MS*34E-0602[ ]C	$13,870	$34,675	60,200	70,820	11,325	129.00	26.63	26.25	470	582
MS*35E-0502[ ]C	$12,990	$32,475	50,180	59,030	12,015	129.00	26.63	26.25	425	500
MS*35E-0643[ ]C	$14,080	$35,200	64,330	75,680	11,205	129.00	26.63	26.25	502	614
MS*36E-0532[ ]C	$13,180	$32,950	53,220	62,610	11,895	129.00	26.63	26.25	452	527
MS*36E-0685[ ]C	$14,270	$35,675	68,530	80,620	10,995	129.00	26.63	26.25	534	646
MS*44E-0594[ ]C	$16,350	$40,875	59,390	69,870	16,180	168.00	26.63	26.25	541	639
MS*44E-0803[ ]C	$18,840	$47,100	80,270	94,430	15,100	168.00	26.63	26.25	616	764
MS*45E-0669[ ]C	$16,600	$41,500	66,900	78,710	16,020	168.00	26.63	26.25	578	676
MS*45E-0858[ ]C	$19,120	$47,800	85,770	100,910	14,940	168.00	26.63	26.25	658	806
MS*46E-0710[ ]C	$16,850	$42,125	70,960	83,480	15,860	168.00	26.63	26.25	615	713
MS*46E-0914[ ]C	$19,430	$48,575	91,370	107,490	14,660	168.00	26.63	26.25	700	848

**** Review technical bulletin for use of 'D' for DOE / NRCan compliant model or 'A' for non-regulated.***
Type 'C' 3 phase motors for use in non-regulated applications are standard. Include price adder with Variable Speed or Dual Speed.
Variable Speed EC motors are 115 V or 208-230 V power only and use 0-10 V DC control signal.
Dual Speed EC Motors are 115 V or 208-230 V power only and use 10 V DC control signal to operate at minimum speed.
[ ] Refrigerant letter. Include price adder for circuiting with B - glycol.

MS MODEL OPTIONS

NUMBER OF FANS	VARIABLE SPEED EC MOTOR ADDER*	ELECTROFIN (AIR OR GAS DEFROST ONLY)	COPPER FIN	PAINTED CABINET WHITE / BLACK	LONG THROW ADAPTERS	GLYCOL CIRCUITING ADDER
1	$150	$2,000	$1,960	$720	$290	$290
2	$290	$2,800	$3,930	$720	$580	$290
3	$440	$3,570	$5,890	$860	$870	$290
4	$590	$4,690	$7,850	$1,050	$1,160	$290

NUMBER OF FANS	SS LONG THROW ADAPTERS	GALVANIZED INSULATED DRAIN PAN	SS DRAIN PAN (ONLY)	SS INSULATED DRAIN PAN	SS HOUSING AND SS DRAIN PAN	SS HOUSING AND SS INSULATED DRAIN PAN
1	$880	$510	$670	$1,350	$2,110	$2,930
2	$1,760	$900	$1,210	$2,380	$3,310	$4,690
3	$2,640	$1,100	$2,330	$3,480	$5,310	$6,750
4	$3,520	$1,460	$2,690	$4,310	$6,280	$8,260

- Non-regulated models are shown with single speed 3 phase motors.
- Confirm AWEF for refrigerant being applied and select Variable or Dual Speed motor as required.
- Controls for Dual Speed or Variable Speed are not included in unit pricing shown.
- Select from controls options on Unit Cooler Accessories.
- Capacities shown reflect midpoint evaporating temperature.

Prices, product availability, and specifications are subject to change without notice.

MS PRODUCT DESCRIPTION - MEDIUM PROFILE EVAPORATORS

Version: August 2025

MS MODEL - Gas Defrost, Low / Medium Temperature

GAS DEFROST - LOW / MEDIUM TEMPERATURE

MODEL	LIST PRICE BY DEFROST TYPE						CAPACITY (BTU/H) @ 10° F TD		AIR FLOW (CFM)	SHIP WGT (LB)	
	(G)#	(H)#	(K)## EXCEPT REFRIGERANT 'H'	(P)## EXCEPT REFRIGERANT 'H'	(K)## REFRIGERANT 'H'	(P)## REFRIGERANT 'H'	-20° F Evap	+20° F Evap		EXCEPT REFRIGERANT 'H'	REFRIGERANT 'H'
MS*14( )-0162[ ]C	$6,280	$4,790	$6,340	$5,010	$15,850	$12,525	16,180	19,030	4,120	174	205
MS*14( )-0212[ ]C	$7,600	$5,920	$7,670	$6,210	$19,175	$15,525	21,170	24,910	3,920	208	255
MS*15( )-0178[ ]C	$6,390	$4,860	$6,430	$5,100	$16,075	$12,750	17,790	20,930	4,060	186	217
MS*15( )-0223[ ]C	$7,740	$6,020	$7,760	$6,290	$19,400	$15,725	22,260	26,190	3,890	221	268
MS*16( )-0195[ ]C	$6,490	$4,940	$6,500	$5,180	$16,250	$12,950	19,500	22,940	4,040	198	229
MS*16( )-0239[ ]C	$7,880	$6,090	$7,880	$6,390	$19,700	$15,975	23,890	28,100	3,850	236	283
MS*24( )-0323[ ]C	$12,860	$10,150	$12,980	$10,640	$32,450	$26,600	32,340	38,050	8,240	297	355
MS*24( )-0424[ ]C	$14,000	$11,150	$14,120	$11,680	$35,300	$29,200	42,350	49,820	7,840	357	445
MS*25( )-0356[ ]C	$13,110	$10,320	$13,160	$10,820	$32,900	$27,050	35,580	41,860	8,120	317	375
MS*25( )-0444[ ]C	$14,260	$11,300	$14,320	$11,850	$35,800	$29,625	44,450	52,290	7,780	381	469
MS*26( )-0390[ ]C	$13,320	$10,460	$13,340	$10,980	$33,350	$27,450	39,000	45,880	8,080	337	395
MS*26( )-0478[ ]C	$14,490	$11,500	$14,520	$12,040	$36,300	$30,100	47,760	56,190	7,700	406	494
MS*34( )-0445[ ]C	$15,110	$11,890	$15,240	$12,460	$38,100	$31,150	44,540	52,400	12,135	398	473
MS*34( )-0602[ ]C	$16,290	$12,900	$16,440	$13,520	$41,100	$33,800	60,200	70,820	11,325	470	582
MS*35( )-0502[ ]C	$15,330	$12,080	$15,479	$12,650	$38,698	$31,625	50,180	59,030	12,015	425	500
MS*35( )-0643[ ]C	$16,550	$13,090	$16,660	$13,700	$41,650	$34,250	64,330	75,680	11,205	502	614
MS*36( )-0532[ ]C	$15,590	$12,260	$15,680	$12,850	$39,200	$32,125	53,220	62,610	11,895	452	527
MS*36( )-0685[ ]C	$16,850	$13,280	$16,880	$13,920	$42,200	$34,800	68,530	80,620	10,995	534	646
MS*44( )-0594[ ]C	$19,320	$15,190	$19,480	$15,940	$48,700	$39,850	59,390	69,870	16,180	541	639
MS*44( )-0803[ ]C	$22,020	$17,520	$22,210	$18,380	$55,525	$45,950	80,270	94,430	15,100	616	764
MS*45( )-0669[ ]C	$19,650	$15,440	$19,740	$16,180	$49,350	$40,450	66,900	78,710	16,020	578	676
MS*45( )-0858[ ]C	$22,390	$17,790	$22,510	$18,650	$56,275	$46,625	85,770	100,910	14,940	658	806
MS*46( )-0710[ ]C	$19,970	$15,670	$20,020	$16,420	$50,050	$41,050	70,960	83,480	15,860	615	713
MS*46( )-0914[ ]C	$22,820	$18,060	$22,850	$18,930	$57,125	$47,325	91,370	107,490	14,660	700	848

MODEL	DIMENSIONS (IN)		
	L	W	H
All gas defrost 1-fan MS models	57.00	26.63	26.25
All gas defrost 2-fan MS models	102.00	26.63	26.25
All gas defrost 3-fan MS models	129.00	26.63	26.25
All gas defrost 4-fan MS models	168.00	26.63	26.25

 # G, H defrost types not available for CO2 (C and H) refrigerant.
K, P defrost types not available for C refrigerant. For H refrigerant will be available soon.
** Review technical bulletin for use of 'D' for DOE / NRCan compliant model or 'A' for non-regulated.*
Type 'C' 3 phase motors for use in non-regulated applications are standard. Include price adder with Variable Speed or Dual Speed.
Variable Speed EC motors are 115 V or 208-230 V power only and use 0-10 V DC control signal.
Dual Speed EC Motors are 115 V or 208-230 V power only and use 10 V DC control signal to operate at minimum speed.
[ ] Refrigerant letter. Include price adder for circuiting with 'B' - glycol.

Available Types ofDdefrost
(H) = HGE 3 Pipe Gas Defrost w/ Electric Pan Heat
(G) = HGG 3 Pipe Gas Defrost w/ Gas Pan Heat
(P) = KGE 2 Pipe Koolgas Defrost w/ Electric Pan Heat
(K) = KGG 2 Pipe Koolgas Defrost w/ Gas Pan Heat

- Non-regulated models are shown with single speed 3 phase motors.
- Confirm AWEF for refrigerant being applied and select Variable or Dual Speed motor as required.
- Controls for Dual Speed or Variable Speed are not included in unit pricing shown.
- Select from controls options on Unit Cooler Accessories.
- Capacities shown reflect midpoint evaporating temperature.

Prices, product availability, and specifications are subject to change without notice.

SM / SV PRODUCT DESCRIPTION - HIGH PROFILE EVAPORATORS

SM / SV MODEL KEY

SM	A	2	5	E	-	0842	T	C	K	K

Unit Type
SM - Space Master
SV - High Velocity

DOE Application
D - DOE and NRCan
A - Non-Regulated

Number of Fans

Fin Spacing
4, 5, 6, 7 FPI

Type of Defrost
A - Air Defrost
E - Electric Defrost w/Electric Pan Heat
G - 3 Pipe Hot Gas w/Gas Pan Heat#
H - 3 Pipe Hot Gas w/Electric Pan Heat#
K - 2 Pipe Koolgas w/Gas Pan Heat##
P - 2 Pipe Koolgas w/Electric Pan Heat##
R - Heat Reclaim#

BTU/H in Hundreds (00)

Refrigerant
N - Stock Unit****
S - R-404A
P - R-507A
G - Stock Unit*****
Q - R-407A
T - R-448A
F - R-407F
R - R-449A
B - Glycol / Brine
H - CO_2 (high pressure)

Motor Type***
C - 3 Phase Motors**
V - Variable Speed EC, 3 Phase
D - Variable Speed EC, Dual Speed Control

Motor Voltage
K - 208-230/3/60
M - 460/3/60
P - 575/3/60
U - 380/3/50
L - 380/3/60*

Heater Voltage
K - 208-230/3/60
M - 460/3/60
P - 575/3/60
U - 380/3/50
L - 380/3/60*

* Contact application engineering for quoting.
** Invertor suitable motor for K, M, P, and U voltages with 3 phase motors.
*** Available in K, M, U, and L motor voltages. **DOE** and **NRCan** applications with Dual Speed or Variable Speed EC control.
**** **N Stock Units** are for non-glide or glide refrigerants (consult I/O manual for complete refrigerant listing).
***** **G Stock Units** are for glide refrigerants only (consult I/O manual for complete refrigerant listing).
 # G, H, and R defrost types not available for CO_2 (C and H) refrigerant.
K and P defrost types not available for C refrigerant, H refrigerant will be available soon.

DOE / NRCan -

The SM / SV Series is constructed for ease of maintenance with testing and options to meet efficiency required by DOE and NRCan regulations.

Prices, product availability, and specifications are subject to change without notice.

SM / SV MODEL - Air Defrost, Medium Temperature

AIR DEFROST - MEDIUM TEMPERATURE

MODEL	LIST PRICE		CAPACITY (BTU/H) @ 10°F TD +25°F Evap	AIR FLOW (CFM)	DIMENSIONS (IN)			SHIP WGT (LB)	
	EXCEPT REFRIGERANT 'H'	REFRIGERANT 'H'			L	W	H	EXCEPT REFRIGERANT 'H'	REFRIGERANT 'H'
SM*14A-0314[ ]C	$6,830	$11,816	31,400	9,860	77.00	38.50	40.50	410	455
SM*16A-0378[ ]C	$7,160	$12,387	37,800	8,980	77.00	38.50	40.50	445	490
SM*17A-0410[ ]C	$7,330	$12,681	41,000	8,550	77.00	38.50	40.50	465	510
SM*14A-0403[ ]C	$7,720	$13,356	40,300	9,690	77.00	38.50	40.50	430	490
SM*16A-0463[ ]C	$7,960	$13,771	46,300	8,810	77.00	38.50	40.50	470	530
SM*17A-0503[ ]C	$8,280	$14,324	50,300	8,390	77.00	38.50	40.50	490	550
SM*14A-0469[ ]C	$8,420	$14,567	46,900	9,510	77.00	38.50	40.50	450	525
SM*16A-0538[ ]C	$8,670	$14,999	53,800	8,480	77.00	38.50	40.50	495	570
SM*17A-0585[ ]C	$9,290	$16,072	58,500	8,100	77.00	38.50	40.50	515	590
SM*14A-0526[ ]C	$9,310	$16,106	52,600	9,330	77.00	38.50	40.50	484	574
SM*16A-0604[ ]C	$9,440	$16,331	60,400	8,400	77.00	38.50	40.50	530	620
SM*17A-0657[ ]C	$9,540	$16,504	65,700	8,000	77.00	38.50	40.50	550	640
SM*24A-0619[ ]C	$10,900	$18,857	61,900	19,700	134.25	38.50	40.50	830	914
SM*26A-0746[ ]C	$11,160	$19,307	74,600	17,900	134.25	38.50	40.50	885	969
SM*27A-0811[ ]C	$11,540	$19,964	81,100	17,100	134.25	38.50	40.50	940	1,024
SM*24A-0797[ ]C	$12,510	$21,642	79,700	19,380	134.25	38.50	40.50	836	948
SM*26A-0915[ ]C	$12,990	$22,473	91,500	17,600	134.25	38.50	40.50	895	1,007
SM*27A-0995[ ]C	$14,760	$25,535	99,500	16,800	134.25	38.50	40.50	950	1,062
SM*24A-0882[ ]C	$15,740	$27,230	88,200	18,890	134.25	38.50	40.50	845	985
SM*26A-1063[ ]C	$16,550	$28,632	106,300	16,900	134.25	38.50	40.50	905	1,045
SM*27A-1155[ ]C	$17,980	$31,105	115,500	16,100	134.25	38.50	40.50	960	1,100
SM*24A-1038[ ]C	$18,800	$32,524	103,800	18,400	134.25	38.50	40.50	858	1,026
SM*26A-1192[ ]C	$19,480	$33,700	119,200	16,800	134.25	38.50	40.50	915	1,083
SM*27A-1296[ ]C	$19,570	$33,856	129,600	15,900	134.25	38.50	40.50	975	1,143
SM*34A-1123[ ]C	$19,740	$34,150	112,300	28,600	134.25	38.50	51.00	960	1,110
SM*36A-1289[ ]C	$20,150	$34,860	128,900	24,900	134.25	38.50	51.00	1,070	1,220
SM*37A-1402[ ]C	$20,600	$35,638	140,200	24,700	134.25	38.50	51.00	1,090	1,240
SM*34A-1243[ ]C	$21,230	$36,728	124,300	28,000	134.25	38.50	51.00	1,034	1,221
SM*36A-1498[ ]C	$21,650	$37,455	149,800	24,600	134.25	38.50	51.00	1,156	1,343
SM*37A-1628[ ]C	$22,790	$39,427	162,800	23,700	134.25	38.50	51.00	1,175	1,362
SM*34A-1463[ ]C	$23,500	$40,655	146,300	27,400	134.25	38.50	51.00	1,100	1,324
SM*36A-1678[ ]C	$23,850	$41,261	167,800	24,400	134.25	38.50	51.00	1,235	1,459
SM*37A-1824[ ]C	$25,870	$44,755	182,400	23,500	134.25	38.50	51.00	1,255	1,479
SM*44A-1532[ ]C	$26,680	$46,156	153,200	33,900	173.00	38.50	52.50	1,280	1,477
SM*46A-1846[ ]C	$27,090	$46,866	184,600	33,200	173.00	38.50	52.50	1,430	1,627
SM*47A-1920[ ]C	$27,530	$47,627	192,000	32,930	173.00	38.50	52.50	1,455	1,652
SM*44A-1829]C	$30,220	$52,281	182,900	33,400	173.00	38.50	52.50	1,380	1,626
SM*46A-2204[ ]C	$30,740	$53,180	220,400	32,800	173.00	38.50	52.50	1,540	1,786
SM*47A-2281[ ]C	$30,870	$53,405	228,100	31,600	173.00	38.50	52.50	1,565	1,811
SM*44A-2015]C	$32,340	$55,948	201,500	33,000	173.00	38.50	52.50	1,470	1,765
SM*46A-2428[ ]C	$32,590	$56,381	242,800	32,530	173.00	38.50	52.50	1,645	1,940
SM*47A-2581[ ]C	$33,190	$57,419	258,100	31,330	173.00	38.50	52.50	1,670	1,965

** Review technical bulletin for use of 'D' for DOE / NRCan compliant model or 'A' for non-regulated.*

¥ Unit requires two (2) expansion valves. Face split is included in the base model price.
Select optional insulated drain pan for air defrost models when required.
3 phase motors for use in non-regulated applications are standard.
Include price adder for Variable Speed or Dual Speed motors and control for variable or dual speed control.
Variable and Dual speed EC motors are 208-230/3/60, 380/3/50, 380/3/60, or 460/3/60 power only.
Variable and Dual Speed EC Motor options are BPM motors with KB electronic drives (VFD) in the control panel.
The KB drives can be used for single speed (no signal), Dual Speed (0 or 10V signal), or Variable Speed (0 thru 10V signal).
The KB drives cannot be bypassed.

See SM / SV options page for additional notes.

Prices, product availability, and specifications are subject to change without notice.

SM / SV MODEL - Electric Defrost, Low / Medium Temperature

ELECTRIC DEFROST - LOW / MEDIUM TEMPERATURE

MODEL	LIST PRICE		CAPACITY (BTU/H) @ 10°F TD		AIR FLOW	DIMENSIONS (IN)			SHIP WGT (LB)	
	EXCEPT REFRIGERANT 'H'	REFRIGERANT 'H'	-20°F Evap	+20°F Evap	(CFM)	L	W	H	EXCEPT REFRIGERANT 'H'	REFRIGERANT 'H'
SM*14E-0384[ ]C	$9,440	$16,331	38,400	40,300	9,690	77.00	38.50	40.50	440	500
SM*15E-0426[ ]C	$10,630	$18,390	42,600	44,700	9,250	77.00	38.50	40.50	450	510
SM*16E-0440[ ]C	$11,250	$19,463	44,000	46,300	8,810	77.00	38.50	40.50	470	530
SM*14E-0501[ ]C	$11,400	$19,722	50,100	52,600	9,330	77.00	38.50	40.50	495	585
SM*15E-0556[ ]C	$11,930	$20,639	55,600	58,400	8,900	77.00	38.50	40.50	505	595
SM*16E-0574[ ]C	$12,520	$21,660	57,400	60,400	8,400	77.00	38.50	40.50	530	620
SM*24E-0759[ ]C	$17,070	$29,531	75,900	79,700	19,380	134.25	38.50	40.50	836	948
SM*25E-0842[ ]C	$18,340	$31,728	84,200	88,400	18,500	134.25	38.50	40.50	874	986
SM*26E-0869[ ]C	$19,600	$33,908	86,900	91,500	17,600	134.25	38.50	40.50	912	1,024
SM*24E-0989[ ]C	$20,280	$35,084	98,900	103,800	18,400	134.25	38.50	40.50	860	1,028
SM*25E-1097[ ]C	$22,220	$38,441	109,700	115,200	17,600	134.25	38.50	40.50	900	1,068
SM*26E-1132[ ]C	$23,220	$40,171	113,200	119,200	16,800	134.25	38.50	40.50	920	1,088
SM*34E-1070[ ]C	$23,670	$40,949	107,000	112,300	28,600	134.25	38.50	51.00	1,030	1,180
SM*35E-1186[ ]C	$24,150	$41,780	118,600	124,500	27,300	134.25	38.50	51.00	1,050	1,200
SM*36E-1225[ ]C	$25,140	$43,492	122,500	128,900	24,900	134.25	38.50	51.00	1,060	1,210
SM*34E-1393[ ]C	$29,400	$50,862	139,300	146,300	27,400	134.25	38.50	51.00	1,195	1,419
SM*35E-1544[ ]C	$30,740	$53,180	154,400	162,100	26,100	134.25	38.50	51.00	1,215	1,439
SM*36E-1594[ ]C	$32,090	$55,516	159,400	167,800	25,800	134.25	38.50	51.00	1,240	1,464
SM*44E-1465[ ]C	$32,220	$55,741	146,500	167,000	38,130	173.00	38.50	52.50	1,370	1,567
SM*45E-1523[ ]C	$33,720	$58,336	152,300	173,600	36,400	173.00	38.50	52.50	1,340	1,537
SM*46E-1754[ ]C	$35,050	$60,637	175,400	184,600	33,200	173.00	38.50	52.50	1,400	1,597
¥ SM*44E-1769[ ]C	$40,280	$69,684	176,900	201,800	36,530	173.00	38.50	52.50	1,469	1,764
¥ SM*45E-1985[ ]C	$42,170	$72,954	198,500	226,300	34,800	173.00	38.50	52.50	1,540	1,835
¥ SM*46E-2307[ ]C	$44,290	$76,622	230,700	242,800	32,530	173.00	38.50	52.50	1,600	1,895

LOW TEMPERATURE ONLY - BELOW +30°F

MODEL	LIST PRICE		CAPACITY (BTU/H) @ 10°F TD		AIR FLOW	DIMENSIONS (IN)			SHIP WGT (LB)	
	EXCEPT REFRIGERANT 'H'	REFRIGERANT 'H'	-20°F Evap	+20°F Evap	(CFM)	L	W	H	EXCEPT REFRIGERANT 'H'	REFRIGERANT 'H'
SV*14E-0422[ ]C	$9,920	$17,162	42,200	-	11,250	77.0	38.5	40.5	440	500
SV*15E-0468[ ]C	$11,110	$19,220	46,800	-	11,125	77.0	38.5	40.5	450	510
SV*16E-0664[ ]C	$11,730	$20,293	66,400	-	11,000	77.0	38.5	40.5	530	590
SV*14E-0550[ ]C	$11,910	$20,604	55,000	-	11,250	77.0	38.5	40.5	495	585
SV*15E-0611[ ]C	$12,390	$21,435	61,100	-	11,125	77.0	38.5	40.5	505	595
SV*16E-0684[ ]C	$13,000	$22,490	68,400		11,000	77.0	38.5	40.5	540	630
SV*24E-0834[ ]C	$18,050	$31,227	83,400	-	24,225	134.25	38.5	40.5	836	948
SV*25E-0926[ ]C	$19,310	$33,406	92,600	-	23,125	134.25	38.5	40.5	874	986
SV*26E-1005[ ]C	$20,570	$35,586	100,500	-	22,800	134.25	38.5	40.5	912	1,024
SV*24E-1088[ ]C	$21,190	$36,659	108,800	-	23,000	134.25	38.5	40.5	860	1,028
SV*25E-1206[ ]C	$23,190	$40,119	120,600	-	22,000	134.25	38.5	40.5	900	1,068
SV*26E-1311[ ]C	$24,840	$42,973	131,100	-	21,550	134.25	38.5	40.5	920	1,088
SV*34E-1177[ ]C	$25,140	$43,492	117,700	-	35,750	134.25	38.5	51.0	1,030	1,180
SV*35E-1304[ ]C	$25,610	$44,305	130,400	-	34,125	134.25	38.5	51.0	1,050	1,200
SV*36E-1418[ ]C	$26,580	$45,983	141,800	-	33,400	134.25	38.5	51.0	1,060	1,210
SV*34E-1530[ ]C	$30,870	$53,405	153,000	-	34,250	134.25	38.5	51.0	1,195	1,419
SV*35E-1698[ ]C	$32,200	$55,706	169,800	-	32,625	134.25	38.5	51.0	1,215	1,439
SV*36E-1843[ ]C	$33,550	$58,042	184,300	-	32,000	134.25	38.5	51.0	1,240	1,464
SV*44E-1699[ ]C	$34,170	$59,114	169,900	-	47,650	173.0	38.5	52.5	1,370	1,567
SV*45E-1883[ ]C	$35,670	$61,709	188,300	-	45,500	173.0	38.5	52.5	1,340	1,537
SV*46E-2047[ ]C	$37,010	$64,027	204,700	-	44,500	173.0	38.5	52.5	1,400	1,597
¥ SV*44E-2052[ ]C	$42,230	$73,058	205,200	-	45,650	173.0	38.5	52.5	1,469	1,764
¥ SV*45E-2274[ ]C	$44,120	$76,328	227,400	-	43,600	173.0	38.5	52.5	1,540	1,835
¥ SV*46E-2472[ ]C	$46,220	$79,961	247,200	-	42,700	173.0	38.5	52.5	1,600	1,895

** Review technical bulletin for use of 'D' for DOE / NRCan compliant model or 'A' for non-regulated.*

¥ Unit requires two (2) expansion valves. Face split is included in the base model price. Face split is only required for 4-fan, 6-row low temp applications. This note does not apply to [H] refrigerant - CO2 high pressure.
Insulated drain pan is standard on electric and gas defrost models.
3 phase motors for use in non-regulated applications are standard.
Include price adder for Variable Speed or Dual Speed motors and control for variable or dual speed control.
Variable and Dual speed EC motors are 208-230/3/60, 380/3/50, 380/3/60, or 460/3/60 power only.
Variable and Dual Speed EC Motor options are BPM motors with KB electronic drives (VFD) in the control panel.
The KB drives can be used for single speed (no signal), Dual Speed (0 or 10V signal), or Variable Speed (0 thru 10V signal).
The KB drives cannot be bypassed.
[ ] Refrigerant letter. Include price adder for circuiting with 'B' - glycol / brine.

See SM / SV options page for additional notes.

Prices, product availability, and specifications are subject to change without notice.

SM / SV PRODUCT DESCRIPTION - HIGH PROFILE EVAPORATORS

Version: August 2025

SM / SV MODEL - Gas Defrost, Low / Medium Temperature

GAS DEFROST - LOW / MEDIUM TEMPERATURE

MODEL	LIST PRICE BY DEFROST TYPE						CAPACITY (BTU/H) @ 10°F TD		AIR FLOW (CFM)	SHIP WGT (LB)	
	(G)#	(H)#	(K)## EXCEPT REFRIGERANT 'H'	(P)## EXCEPT REFRIGERANT 'H'	(K)## REFRIGERANT 'H'	(P)## REFRIGERANT 'H'	-20°F Evap	+20°F Evap		EXCEPT REFRIGERANT 'H'	REFRIGERANT 'H'
SM*14( )-0384[ ]C	$10,250	$9,650	$11,250	$10,640	$19,463	$18,407	38,400	40,300	9,690	440	500
SM*15( )-0426[ ]C	$11,170	$10,570	$12,170	$11,570	$21,054	$20,016	42,600	44,700	9,250	450	510
SM*16( )-0440[ ]C	$11,760	$11,170	$12,880	$12,250	$22,282	$21,193	44,000	46,300	8,810	470	530
SM*14( )-0501[ ]C	$12,020	$11,410	$13,180	$12,580	$22,801	$21,763	50,100	52,600	9,330	495	585
SM*15( )-0556[ ]C	$12,480	$11,890	$13,650	$13,030	$23,615	$22,542	55,600	58,400	8,900	505	595
SM*16( )-0574[ ]C	$13,060	$12,480	$14,910	$13,640	$25,794	$23,597	57,400	60,400	8,400	530	620
SM*24( )-0759[ ]C	$18,660	$17,620	$19,820	$18,780	$34,289	$32,489	75,900	79,700	19,380	836	948
SM*25( )-0842[ ]C	$18,960	$17,930	$20,140	$19,090	$34,842	$33,026	84,200	88,400	18,500	874	986
SM*26( )-0869[ ]C	$21,180	$20,110	$23,050	$19,900	$39,877	$34,427	86,900	91,500	17,600	912	1,024
SM*24( )-0989[ ]C	$22,770	$21,710	$26,540	$25,480	$45,914	$44,080	98,900	103,800	18,400	860	1,028
SM*25( )-1097[ ]C	$23,920	$22,870	$27,720	$26,670	$47,956	$46,139	109,700	115,200	17,600	900	1,068
SM*26( )-1132[ ]C	$25,610	$24,550	$28,100	$27,800	$48,613	$48,094	113,200	119,200	16,800	920	1,088
SM*34( )-1070[ ]C	$25,980	$24,920	$29,760	$28,700	$51,485	$49,651	107,000	112,300	28,600	1,030	1,180
SM*35( )-1186[ ]C	$26,590	$25,550	$30,390	$29,050	$52,575	$50,257	118,600	124,500	27,300	1,050	1,200
SM*36( )-1225[ ]C	$27,730	$26,670	$31,010	$30,160	$53,647	$52,177	122,500	128,900	24,900	1,060	1,210
SM*34( )-1393[ ]C	$29,630	$28,560	$33,760	$31,000	$58,405	$53,630	139,300	146,300	27,400	1,195	1,419
SM*35( )-1544[ ]C	$30,660	$29,490	$34,650	$33,620	$59,945	$58,163	154,400	162,100	26,100	1,215	1,439
SM*36( )-1594[ ]C	$34,110	$33,040	$36,730	$34,950	$63,543	$60,464	159,400	167,800	25,800	1,240	1,464
SM*44( )-1465[ ]C	$36,080	$34,420	$43,340	$40,500	$74,978	$70,065	146,500	167,000	38,130	1,370	1,567
SM*45( )-1523[ ]C	$37,580	$35,910	$45,230	$42,230	$78,248	$73,058	152,300	173,600	36,400	1,340	1,537
SM*46( )-1754[ ]C	$38,920	$37,250	$46,910	$43,800	$81,154	$75,774	175,400	184,600	33,200	1,400	1,597
¥ SM*44( )-1769[ ]C	$44,650	$42,980	$53,260	$49,110	$92,140	$84,960	176,900	201,800	36,530	1,469	1,764
¥ SM*45( )-1985[ ]C	$46,540	$44,860	$55,770	$52,080	$96,482	$90,098	198,500	226,300	34,800	1,540	1,835
¥ SM*46( )-2307[ ]C	$48,140	$41,770	$58,410	$53,960	$101,049	$93,351	230,700	242,800	32,530	1,600	1,895

LOW TEMPERATURE ONLY - BELOW +30°F

MODEL	LIST PRICE BY DEFROST TYPE						CAPACITY (BTU/H) @ 10°F TD		AIR FLOW (CFM)	SHIP WGT (LB)	
	(G)#	(H)#	(K)## EXCEPT REFRIGERANT 'H'	(P)## EXCEPT REFRIGERANT 'H'	(K)## REFRIGERANT 'H'	(P)## REFRIGERANT 'H'	-20°F Evap	+20°F Evap		EXCEPT REFRIGERANT 'H'	REFRIGERANT 'H'
SV*14( )-0422[ ]C	$10,720	$10,130	$11,730	$11,120	$20,293	$19,238	42,200	-	11,250	440	500
SV*15( )-0468[ ]C	$11,660	$11,050	$12,640	$12,050	$21,867	$20,847	46,800	-	11,125	450	510
SV*16( )-0664[ ]C	$12,250	$11,660	$13,370	$12,740	$23,130	$22,040	66,400	-	11,000	530	530
SV*14( )-0550[ ]C	$12,520	$11,910	$13,660	$13,060	$23,632	$22,594	55,000	-	11,250	495	585
SV*15( )-0611[ ]C	$12,960	$12,360	$14,140	$13,520	$24,462	$23,390	61,100	-	11,125	505	595
SV*16( )-0684[ ]C	$13,560	$12,960	$15,390	$14,130	$26,625	$24,445	68,400		11,000	540	630
SV*24( )-0834[ ]C	$19,640	$18,590	$20,790	$19,750	$35,967	$34,168	83,400	-	24,225	836	948
SV*25( )-0926[ ]C	$19,940	$18,900	$21,110	$20,060	$36,520	$34,704	92,600	-	23,125	874	986
SV*26( )-1005[ ]C	$22,140	$21,070	$24,020	$20,860	$41,555	$36,088	100,500	-	22,800	912	1,024
SV*24( )-1088[ ]C	$23,750	$22,680	$27,520	$26,460	$47,610	$45,776	108,800	-	23,000	860	1,028
SV*25( )-1206[ ]C	$24,890	$23,840	$28,690	$27,640	$49,634	$47,817	120,600	-	22,000	900	1,068
SV*26( )-1311[ ]C	$26,580	$25,520	$29,060	$28,770	$50,274	$49,772	131,100	-	21,550	920	1,088
SV*34( )-1177[ ]C	$27,450	$26,390	$31,220	$30,150	$54,011	$52,160	117,700	-	35,750	1,030	1,180
SV*35( )-1304[ ]C	$28,060	$27,010	$31,860	$30,520	$55,188	$52,800	130,400	-	34,125	1,050	1,200
SV*36( )-1418[ ]C	$29,180	$28,120	$32,470	$31,630	$56,173	$54,720	141,800	-	33,400	1,060	1,210
SV*34( )-1530[ ]C	$31,080	$30,020	$35,210	$32,450	$60,913	$56,139	153,000	-	34,250	1,195	1,419
SV*35( )-1698[ ]C	$32,120	$30,950	$36,110	$35,090	$62,470	$60,706	169,800	-	32,625	1,215	1,439
SV*36( )-1843[ ]C	$35,560	$34,500	$38,180	$36,410	$66,051	$62,989	184,300	-	32,000	1,240	1,464
SV*44( )-1699[ ]C	$38,020	$36,360	$45,280	$42,440	$78,334	$73,421	169,900	-	47,650	1,370	1,567
SV*45( )-1883[ ]C	$39,530	$37,860	$47,170	$44,180	$81,604	$76,431	188,300	-	45,500	1,340	1,537
SV*46( )-2047[ ]C	$40,860	$39,200	$48,850	$45,740	$84,511	$79,130	204,700	-	44,500	1,400	1,597
¥ SV*44( )-2052[ ]C	$46,590	$44,930	$55,200	$51,050	$95,496	$88,317	205,200	-	45,650	1,469	1,764
¥ SV*45( )-2274[ ]C	$48,490	$46,800	$57,710	$54,020	$99,838	$93,455	227,400	-	43,600	1,540	1,835
¥ SV*46( )-2472[ ]C	$50,090	$43,710	$60,350	$55,900	$104,406	$96,707	247,200	-	42,700	1,600	1,895

G, H defrost types not available for CO2 (C and H) refrigerant.
K, P defrost types not available for C refrigerant. For H refrigerant will be available soon.
* Review technical bulletin for use of 'D' for DOE / NRCan compliant model or 'A' for non-regulated.
¥ Unit requires two (2) expansion valves. Face split is included in the base model price. Face split is only required for 4-fan, 6-row low temp applications. This note does not apply to [H] refrigerant - high pressure CO_2.
Insulated drain pan is standard on electric and gas defrost models.
3 phase motors for use in non-regulated applications are standard.
Include price adder for Variable Speed or Dual Speed motors and control for variable or dual speed control.
Variable and Dual speed EC motors are 208-230/3/60, 380/3/50, 380/3/60, or 460/3/60 power only.
Variable and Dual Speed EC Motor options are BPM motors with KB electronic drives (VFD) in the control panel.
The KB drives can be used for single speed (no signal), Dual Speed (0 or 10V signal), or Variable Speed (0 thru 10V signal).
The KB drives cannot be bypassed.
[ ] Refrigerant letter. Include price adder for circuiting with 'B' - glycol.

See SM / SV options page for additional notes.

Available types of defrost

(H) = HGE 3 Pipe Hot Gas with Electric Pan
(G) = HGG 3 Pipe Hot Gas with Hot Gas Pan
(P) = KGE 2 Pipe Koolgas with Electric Pan
(K) = KGG 2 Pipe Koolgas with Koolgas Pan

Prices, product availability, and specifications are subject to change without notice.

SM / SV PRODUCT DESCRIPTION - HIGH PROFILE EVAPORATORS

Version: August 2025

SM / SV MODEL - Gas Defrost, Low / Medium Temperature

MODEL	DIMENSIONS (IN)		
	L	W	H
All gas defrost 1-fan SM/SV models	77.00	38.50	40.50
All gas defrost 2-fan SM/SV models	134.25	38.50	40.50
All gas defrost 3-fan SM/SV models	134.25	38.50	51.00
All gas defrost 4-fan SM/SV models	173.00	38.50	52.50

SM / SV MODEL OPTIONS

NUMBER OF FANS	VARIABLE OR DUAL SPEED EC MOTOR (1)	ELECTROFIN (AIR OR GAS DEFROST ONLY)	COPPER FIN	PAINTED CABINET WHITE / BLACK	GALVANIZED LONG THROW ADAPTERS	SS LONG THROW ADAPTER	HEAT RECLAIM OR GLYCOL CIRCUITING
1	$1,530	$2,960	$3,540	$720	$370	$1,210	$290
2	$3,070	$5,360	$7,080	$860	$740	$2,420	$290
3	$4,600	$7,120	$10,620	$910	$1,110	$3,630	$290
4	$6,130	$9,360	$14,150	$1,110	$1,480	$4,840	$290

NUMBER OF FANS	INSULATED DRAIN PAN	SS DRAIN PAN (ONLY)	SS INSULATED DRAIN PAN (AIR DEFROST)	SS HOUSING AND DRAIN PAN	SS HOUSING AND SS INSULATED DRAIN PAN (AIR DEFROST)
1	$1,080	$900	$2,140	$3,030	$4,270
2	$1,480	$1,900	$3,910	$4,530	$6,520
3	$1,480	$1,900	$3,910	$4,790	$6,780
4	$1,960	$2,340	$4,050	$5,780	$7,490

** Review technical bulletin for use of 'D' for DOE / NRCan compliant model or 'A' for non-regulated.*

3 phase motors for use in non-regulated applications are standard.
Variable and Dual Speed EC motors are 208-230/3/60, 380/3/50, 380/3/60, or 460/3/60 power only.
[ ] Refrigerant letter. Include price adder for circuiting with 'B' - glycol.

(1) Variable and Dual Speed EC Motor options are BPM motors with KB electronic drives (VFD) in the control panel.
The KB drives can be used for single speed (no signal), Dual Speed (0 or 10 V signal), or Variable Speed (0 thru 10 V signal).
The KB drives cannot be bypassed.

*** Four fan SM / SV units for low temperature applications, requires two (2) expansion valves.*
Face split is included in the base model price.
Insulated drain pan is standard on electric and gas defrost models.
Select optional insulated drain pan for air defrost models when required.

- Confirm AWEF for refrigerant being applied and select Variable or Dual Speed motor as required.
- Controls for Dual Speed or Variable Speed are not included in unit pricing shown.
- Select from controls options on Unit Cooler Accessories.
- Capacities shown reflect midpoint evaporating temperature.

Prices, product availability, and specifications are subject to change without notice.

OPTIONS

HEAT EXCHANGERS

CONDENSING UNIT (HP)	FREEZER (BTU/H)	COOLER (BTU/H)	PACKLESS MODEL	CONNECTION SIZE (IN) LIQUID	CONNECTION SIZE (IN) SUCTION	KRACK KIT	LIST PRICE
1	6,500	11,300	HXR50	3/8	5/8	HX-2	$190
1.5	7,500	20,000	HXR75	3/8	7/8	HX-3	$200
2	10,000	25,000	HXR100	3/8	1-1/8	HX-4	$220
3	15,000	30,000	HXR150	1/2	1-1/8	HX-5	$280
5	25,000	65,000	HXR250A	5/8	1-3/8	HX-6	$350
7.5	32,500	76,000	HXR350A	5/8	1-5/8	HX-7	$370
10	61,200	90,000	HXR500	7/8	2-1/8	HX-8	$630
15	73,000	157,000	HX15	7/8	2-1/8	HX-15	$950
20	93,000	211,200	HX20	1-1/8	2-1/8	HX-20	$1,020
25	118,000	243,600	HX25	1-1/8	2-5/8	HX-25	$1,180
30	141,000	322,800	HX30	1-3/8	2-5/8	HX-30	$1,200
50	240,000	420,000	HX35	1-3/8	2-5/8	HX-35	$1,250
60	280,000	500,000	HX40	1-3/8	3-1/8	HX-40	$1,400

HEAT EXCHANGERS (CO_2)

CONDENSING UNIT (HP)	DOUCETTE MODEL	CONNECTION SIZE (IN) LIQUID	CONNECTION SIZE (IN) GAS	KRACK KIT	LIST PRICE
1	SLHE1	3/8	5/8	0421621	$320
1.5	SLHE1.5	3/8	7/8	0421622	$350
3	SLHE3	1/2	1-1/8	3005766	$410

These heat exchangers should not be applied in medium temp cooler application where the gas outlet temperature may exceed the incoming liquid temperature. These heat exchangers are rated for 700 psig working pressure.

MECHANICAL VALVES	LIST PRICE	
Expansion Valve - Sporlan	**LOOSE**	**MOUNTED**
2,000 - 60,000 BTU/H	$350	$590
60,001 - 150,000 BTU/H	$460	$590
>150,000 BTU/H	$560	$590
Solenoid Valves - Sporlan (Specify 115 V or 208-230 V Coil)		
2,000 - 40,000 BTU/H	$280	$780
40,001 - 200,000 BTU/H	$360	$780
>200,000 BTU/H	$500	$780

ELECTRONIC EXPANSION VALVES *	MOUNTED
EEV Only Sporlan Stepper (HFC / HFO / standard pressure CO_2)	$820
EEV Only Danfoss PWM (HFC / HFO / all CO_2)	$1,340
EEV Only Sporlan PWM (HFC / HFO / all CO_2)**	$820
Sporlan (SER-*HP) stepper (high pressure CO_2)***	$1,435
Danfoss (CCMT *) stepper (high pressure CO_2)	$4,700
Specify coil voltage for PWM valves (115 V or 208-240 V)	

** EEV orders require refrigerant conditions, coil TD, controller used, voltage for PWM coil (120 V or 208-240 V), and use for temperature sensors supplied (room temp, termination / coil temp, discharge air, etc.).*
*** Consult Application Engineering for Sporlan PWM availability if required capacity exceeds 45,000 BTU/H (See Sporlan Bulletin 30-30).*
**** Only available in sizes AA, A, B, and C*

MISCELLANAEOUS OPTIONS	LIST PRICE
Nema 4X Non-Fused Disconnect Switch Mounted for MK, MV, MS, SM, or SV *	$650
ALLS - Liquid Stabilizer	$590
Reheat 4.65KW per Fan (MS, SM) **	$2,370
Face Split Coil for MS, SM, or SV and Includes Two Distributors (Requires Two TXV's)	$690
Adjustable Defrost Termination KP-73	$490
Klixon for Fan Delay	$200
RT3 Electronic Thermostat - Room Thermostat (Loose) ***	$330

** Disconnects are rated for 30A (E151572), 60A (E151867), or 100A (E410438001). Quantity and size of these disconnects varies on power feed location and electrical loads.*
*** Not available for DOE regulated applications.*
**** Electronic thermostat Ranco ETC111000 (RT3), 120/208-240 V, temperature range -30°F to 220°F.*

EVAPORATOR COIL COATINGS

Heresite coating is available at two times Electrofin price and can be used with electric defrost. Coil coatings typically increase lead times one week for Electrofin and two weeks for Heresite.

NUMBER OF FANS	INSTALLED ELECTRICAL MK / MV	INSTALLED ELECTRICAL MS 208-230 V (ELECTRIC DEFROST ONLY)	INSTALLED ELECTRICAL MS PAN HEATER OR 460 V ELECTRIC DEFROST	INSTALLED ELECTRICAL SM / SV ELECTRIC DEFROST (208-230 V ONLY)	INSTALLED ELECTRICAL SM / SV PAN HEATER or 460 V ELECTRICAL DEFROST
1	$230	$280	$280	$570	$280
2	$230	$280	$280	$570	$280
3	$280	$280	$280	$570	$280
4	$280	$570	$280	$570	$280

INSTALLED ELECTRICAL NOTES

1) Kits are to be selected for Single Point Power feed applications when installed contactors and fuses are required for heater and fan control.
2) Installed electrical includes fuses, relay / contactor and single point power feed to the evaporator.
3) If a KE2 Evap OEM board is selected, the board will be wired to the installed relays / contactors.
4) If a KE2 Evap OEM board is NOT selected, the field control voltage must be provided.

** Ship loose pricing available only with factory orders. Not available with stock shipments.*

Standard Pressure CO_2 [C] SOLENOID VALVES - SPORLAN (Including dual voltage 120-240 V coil)	KRACK KIT	LOOSE	MOUNTED
8,000 - 58,000 BTU/H	3173754 - E2 - HP 3173755 - E5 - HP	$300	N/A
58,001 - 140,000 BTU/H	3173775 - ME6 - HP 3173757 - ME8 - HP 3173777 - ME9 - HP 3173758 - ME10S1 - HP	$440	N/A

Prices, product availability, and specifications are subject to change without notice.

OPTIONS

High Pressure CO2 [H] SOLENOID VALVES - EVUL DANFOSS (Specify 115 V or 208-230 V Coil)	KRACK KIT	LOOSE	MOUNTED
8,000 - 258,100 BTU/H	3234522 - KIT-SOL .250 EVUL1 115V 3234524 - KIT-SOL .250 EVUL2 115V 3234525 - KIT-SOL .375 EVUL3 115V 3234526 - KIT-SOL .375 EVUL4 115V 3234527 - KIT-SOL .500 EVUL4 115V 3234528 - KIT-SOL .375 EVUL5 115V 3234529 - KIT-SOL .500 EVUL5 115V 3234530 - KIT-SOL .375 EVUL6 115V 3234531 - KIT-SOL .500 EVUL6 115V 3234532 - KIT-SOL .500 EVUL8 115V 3234533 - KIT-SOL .250 EVUL1 230V 3234534 - KIT-SOL .250 EVUL2 230V 3234535 - KIT-SOL .375 EVUL3 230V 3234537 - KIT-SOL .375 EVUL4 230V 3234538 - KIT-SOL .500 EVUL4 230V 3234539 - KIT-SOL .375 EVUL5 230V 3234540 - KIT-SOL .500 EVUL5 230V 3234541 - KIT-SOL .375 EVUL6 230V 3234543 - KIT-SOL .500 EVUL6 230V 3234544 - KIT-SOL .500 EVUL8 230V	$500	N/A

** Reference wiring diagrams in technical bulletins and IO manuals for examples of controls.*

DUAL SPEED CONTROL OPTIONS (KR, GL, GH, or LH)	LOOSE	MOUNTED
RT3 (Electronic Thermostat for Dual Speed)	$330	$550
R24 V Relay (24VAC Low Speed Relay)		$160
R1B Relay (115VAC Low Speed Realy)		$160
R2A Relay (230VAC Low Speed Relay)		$160

DUAL SPEED CONTROL NOTES (KR, GL, GH, or LH)

1) A single RT3 Electronic Thermostat cannot be used for both Dual Speed control and as a room thermostat.
2) The R24V, R1B, and R2A Low Speed Relays are to be controlled by a control signal from a field controller with their respective voltage (24VAC, 115VAC, or 230VAC).

VARIABLE SPEED CONTROL OPTIONS (KR, GL, GH, or LH)	LOOSE	MOUNTED
VC4P (JCI System 450 + Temp Sensor)	$760	$990

VARIABLE SPEED CONTROL NOTES (KR, GL, GH, or LH)

1) For variable speed control, each unit cooler includes an amplifier to boost the 0-10VDC control signal.
2) VC4P includes a JCI System 450, and Temp Sensor.
The JCI System 450 provides a proportional 0-10VDC signal between two temperature set points.

DUAL SPEED CONTROL OPTIONS (MK, MV, MS, SM, or SV)	LOOSE	MOUNTED
RT4 (Electronic Thermostat + Low Speed Relay + 10VDC Power Supply)	$460	$690
R24P Relay (Low Speed Relay + 10VDC Power Supply)		$370
PSUP (10VDC Power Supply only)	$140	$330

DUAL SPEED CONTROL NOTES (MK, MV, MS, SM, or SV)

1) The 10VDC Power Supply (PSUP) provides 10VDC which enables low speed operation (115 V or 208 V Input).
2) The 10VDC low speed signal can be controlled by either an electronic thermostat and relay (RT4), a relay (R24P) controlled by a field supplied controller, or a field supplied relay and controller (for PSUP only).
3) The R24P low speed relay is available in 24VAC, 115VAC, or 230VAC. Control voltage must be specifed.
4) A single electronic thermostat cannot be used for both dual speed control and as a room thermostat.

VARIABLE SPEED CONTROL OPTIONS (MK, MV, MS, SM, or SV)	LOOSE	MOUNTED
VC4 includes JCI System 450 + Transformer + Temp Sensor	$710	
VC4A includes JCI System 450 + Transformer + Temp Sensor (208 V)		$880
VC4B includes JCI System 450 + Transformer + Temp Sensor (115 V)		$880

VARIABLE SPEED CONTROL NOTES (MK, MV, MS, SM, or SV)

1) The JCI System 450 provides a proportional 0-10VDC signal between two temperature setpoints.
2) The JCI System 450 is powered by a tranformer with an output voltage of 24 V. When mounted, input voltage to the tranformer needs specified as 208 V (VC4A) or 115 V (VC4B).
3) The transformer input voltage (VC4A or VC4B) must match the motor voltage for the transformer input to be factory wired.
4) A dual voltage transformer (115 V / 208 V) is supplied with the VC4.

MOUNTED CONTROL ACCESSORIES OPTIONS	LIST PRICE
Temp Sensor (CPC, Danfoss, MT, KE2)	$250
Temp Sensor (Novar)	$340
Pressure Transducer and Superheat Temp Sensor for HFC / HFO.	
- For CPC, Corelink, Dixell XM67x, and Microthermo	$550
- For Danfoss AK-CC550A or AK-CC750A	$820
- For KE2 Therm	$670
Pressure Transducer and Superheat Temp Sensor (standard pressure CO2 [C]).	
- For CPC, Corelink, Dixell XM67x, and Microthermo	$1,090
- Danfoss AK-CC550A or AK-CC750A	$990
- RDM CO_2 Xducer and Superheat Temp	$1,140

MOUNTED CONTROL ACCESSORIES NOTES

1) Must specify temp sensor application (i.e. Defrost Termination, Coil Temperature, Return Air Temperature, etc.).
2) EEV requires a transducer and superheat sensor (field supplied or mounted).

KE2 THERM OPTIONS	LIST PRICE
INSTALLED ITEMS	
KE2 EvapOEM board Installed on MK, MV, MS, SM, and SV evaporators only	$1,460
Remote Display	$160
Temp Sensor	$250
EEV Only Sporlan Stepper (HFC / HFO / CO_2)	$820
Transducer and Superheat Temp for HFC	$670
EEV Only Sporlan PWM (HFC/HFO/CO_2)	$2,100
EEV Only Danfoss PWM (HFC/HFO/CO_2)	$2,620
KE2 CO_2 Xducer and Superheat Temp	$1,210

SHIP LOOSE ITEMS	
8 Port Switch	$490
16 Port Switch	$990
Edge Manager Plus	$1,380
Wi-Fi Service Tool	$860

KE2 THERM NOTES

1) Must specify temp sensor application (i.e. Defrost Termination, Coil Temperature, Return Air Temperature, etc.).
2) EEV requires a transducer and superheat sensor (field supplied or mounted).

TRANSDUCER WITH SUPERHEAT TEAMPERATURE SENSOR	LIST PRICE
CLK CO_2 1,305 PSI (90 BAR) TRANSDUCER AND SUPERHEAT TEMP	$1,395
DAN CO_2 1,305 PSI (90 BAR) TRANSDUCER AND SUPERHEAT TEMP	$1,295
DIX CO_2 1,305 PSI (90 BAR) TRANSDUCER AND SUPERHEAT TEMP	$1,395
MTH CO_2 1,305 PSI (90 BAR) TRANSDUCER AND SUPERHEAT TEMP	$1,395
KE2 CO_2 1,305 PSI (90 BAR) TRANSDUCER AND SUPERHEAT TEMP	$2,010

Prices, product availability, and specifications are subject to change without notice.

DOE EVAPORATOR SUMMARY MATRIX

Version: August 2025

SMALL EVAPORATORS

* Glide efrigerants (R-407A, R-407F, R-448A, R-449A, refer to I/O Manual for others). Models in tables with '*' are not tied to this note.

** Non-Glide refrigerants (R-404A, R-507A, refer to I/O Manual for others)

	KR		LH		GH / GL	
	DUAL SPEED MOTORS	VARIABLE SPEED MOTORS	DUAL SPEED MOTORS	VARIABLE SPEED MOTORS	DUAL SPEED MOTORS	VARIABLE SPEED MOTORS
DEFROST TYPE						
Air						
Glide Refrigerants*	X	X	X	X	X	X
Non-Glide Refrigerants (including CO_2)**	X	X	-	X	X (Except GL*56A and GL*14A)	X
Electric						
Glide Refrigerants*						
Coolers	X	X	X (Except LH*44E)	X	X	X
Freezers	X	X	X (Except LH*44E)	X	-	-
Non-Glide Refrigerants (Including CO_2)**						
Coolers	-	X	-	X	X (Except GL*56D and GL*14D)	X
Freezers	-	X	-	X	-	-
Gas						
Glide Refrigerants*						
Coolers	X	X	-	-	X	X
Freezers	X	X	-	-	-	-
Non-Glide Refrigerants (Including CO_2)**						
Coolers	-	X	-	-	X (Except GL*56( ) and GL*14( ))	X
Freezers	-	X	-	-	-	-
MOTOR VOLTAGES / PHASE (All 60 HZ)						
115/1	X	X	X	X	X	X
208-230/1	X	X	X	X	X	X
208-230/3	X	X	X	X	X	X
460/1	-	-	-	-	-	-
460/3	-	-	-	-	-	-
575/3	-	-	-	-	-	-

Prices, product availability, and specifications are subject to change without notice.

LARGE EVAPORATORS

	MK / MV		MS		SM / SV	
	DUAL SPEED MOTORS	**VARIABLE SPEED MOTORS**	**DUAL SPEED MOTORS**	**VARIABLE SPEED MOTORS**	**DUAL SPEED MOTORS**	**VARIABLE SPEED MOTORS**
DEFROST TYPE						
Air						
Glide Refrigerants*	X	X	-	X	X (Except SM*14A, SM*24A, SM*26A-0746, SM*27A-0811, SM*34A-1123 and 1243, SM*36A-1289, SM*37A-1402, SM*44A-1532 and 1829, SM*46A-1846)	X
Non-Glide Refrigerants (Including CO_2)**#	X (Except MK*18A-133, MK*28A-266, MK*16A-118, MK*26A-236 and 290, MK*14A-94 and 121, MK*24A-188 and 242)	X	-	X	X (Units Available: SM*16A-0538 and 604, SM*17A-0585 and 0657, SM*27A-1296, and SM*47A-2581)	X
Electric						
Glide Refrigerants*						
Coolers	X	X (Except ALL MV Models)	-	X	X (Except SM*14E-0384, SM*24E-0759, SM*34E-1070, SM*36E-1225, SM*46E-1754)	X
Freezers	X (Except ALL MV Models)	X (Except All MV Models)	-	X	X (Except ALL SV Models)	X
Non-Glide Refrigerants (Including CO_2)**#						
Coolers	-	X (Except All MV Models)	-	X	-	X
Freezers	-	X (Except All MV Models)	-	X	-	X
Gas						
Glide Refrigerants*						
Coolers	X (Except ALL MV Models)	X (Except ALL MV Models)	-	X	X (Except SM*14( )-0384, SM*24( )-0759, SM*34( )-1070, SM*36( )-1225, SM*46( )-1754)	X
Freezers	X (Except ALL MV Models)	X (Except ALL MV Models)	-	X	X	X
Non-Glide Refrigerants (Including CO_2)**#						
Coolers	-	X (Except ALL MV Models)	-	X	-	X
Freezers	-	X (Except ALL MV Models)	-	X	-	X
MOTOR VOLTAGES / PHASE (All 60 HZ)						
115/1	X	X	X	X	-	-
208-230/1	X	X	X	X	-	-
208-230/3	X[2]	X[2]	X[2]	X[2]	X	X
460/1	-	x	-	-	-	-
460/3	-	x	-	-	X	X
575/3	-	-	-	-	-	-

* Glide refrigerants (R-407A, R-407F, R-448A, R-449A, refer to I/O Manual for others). Models in tables with '*' are not tied to this note.

** Non-Glide refrigerants (R-404A, R-507A, refer to I/O Manual for others)

[2] Only on multiple fan units wired for 3 phase operation

#CO2 MS, SM, SV are not DOE certified.

Prices, product availability, and specifications are subject to change without notice.

LEVITOR II MODEL KEY

L	A	V	A	1	2	4	10	M

UNIT TYPE:
L = Levitor Condenser

TUBE DIAMETER:
A = 3/8
E = 1/2

FAN DISCHARGE DIRECTIONS:
H = Horizontal
V = Vertical
X = Hinged Vertical
E = Hinged Horizontal

FAN / MOTOR COMBINATION:
A = 850 RPM, 1 HP, 30"
B = 1140 RPM, 0.5 HP, 24"
C = 850 RPM, 1.5 HP, 30"
E = 575 RPM, 0.5 HP, 30"
F = 1140 RPM, 1.5 HP, 30"
K = 1140 RPM, 1.5 HP, 30"*

FANS WIDE: 1, 2

VOLTAGE:
A = 230/1/60**
K = 208-230/3/60
M = 460/3/60
P = 575/3/60
U = 380/3/50

FIN SPACING:
08 = 8 FPI
10 = 10 FPI
12 = 12 FPI

ROWS DEEP:
2
3
4

FANS IN LINE:
1
2
3
4
5
6

** K Vspeed Variable Speed BPM (brushless permanent magnet motors) and panel mounted electronic drive are 208-240/3/60, 380/3/50, 380/3/60, and 460/3/60. Gravity dampers should not be used with K motor applications.*
*** LAVB only.*

See Tech Bulletin for Title 24 compliant models.

Prices, product availability, and specifications are subject to change without notice.

LEVITOR II PRODUCT DESCRIPTION - AIR-COOLED CONDENSERS

Version: August 2025

LEVITOR II MODEL - LAVB

LAVB - 0.5 HP, 1140 RPM, 24" FAN

ONE FAN WIDE MODELS	LIST PRICE	DIMENSIONS (IN) L	W	H*	SHIP WGT (LB)
LAVB 11208	$6,050	39.00	45.75	41.25	178
LAVB 11210	$6,200	39.00	45.75	41.25	181
LAVB 11212	$6,470	39.00	45.75	41.25	184
LAVB 11308	$6,360	39.00	45.75	41.25	180
LAVB 11310	$6,530	39.00	45.75	41.25	185
LAVB 11312	$6,800	39.00	45.75	41.25	190
LAVB 11408	$6,690	39.00	45.75	41.25	193
LAVB 11410	$6,860	39.00	45.75	41.25	200
LAVB 11412	$7,160	39.00	45.75	41.25	207
LAVB 12208	$8,000	75.00	45.75	41.25	346
LAVB 12210	$8,220	75.00	45.75	41.25	352
LAVB 12212	$8,580	75.00	45.75	41.25	358
LAVB 12308	$9,480	75.00	45.75	41.25	362
LAVB 12310	$9,740	75.00	45.75	41.25	372
LAVB 12312	$10,170	75.00	45.75	41.25	382
LAVB 12408	$10,550	75.00	45.75	41.25	386
LAVB 12410	$10,840	75.00	45.75	41.25	400
LAVB 12412	$11,330	75.00	45.75	41.25	413
LAVB 13308	$11,300	111.00	45.75	41.25	544
LAVB 13310	$11,620	111.00	45.75	41.25	559
LAVB 13312	$12,140	111.00	45.75	41.25	574
LAVB 13408	$13,930	111.00	45.75	41.25	580
LAVB 13410	$14,320	111.00	45.75	41.25	600
LAVB 13412	$14,990	111.00	45.75	41.25	620
LAVB 14308	$15,890	147.00	45.75	41.25	820
LAVB 14310	$16,350	147.00	45.75	41.25	840
LAVB 14312	$17,120	147.00	45.75	41.25	860
LAVB 14408	$16,220	147.00	45.75	41.25	873
LAVB 14410	$16,680	147.00	45.75	41.25	900
LAVB 14412	$17,470	147.00	45.75	41.25	927
LAVB 15308	$19,010	183.00	45.75	41.25	836
LAVB 15310	$19,570	183.00	45.75	41.25	861
LAVB 15312	$20,490	183.00	45.75	41.25	886
LAVB 15408	$21,140	183.00	45.75	41.25	917
LAVB 15410	$21,760	183.00	45.75	41.25	950
LAVB 15412	$22,790	183.00	45.75	41.25	983
LAVB 16308	$21,230	219.00	45.75	41.25	1,040
LAVB 16310	$21,850	219.00	45.75	41.25	1,070
LAVB 16312	$22,890	219.00	45.75	41.25	1,100
LAVB 16408	$24,430	219.00	45.75	41.25	1,110
LAVB 16410	$25,150	219.00	45.75	41.25	1,150
LAVB 16412	$26,360	219.00	45.75	41.25	1,190
LAVB 17308	$25,410	262.00	45.75	41.25	1,314
LAVB 17310	$26,160	262.00	45.75	41.25	1,349
LAVB 17312	$27,400	262.00	45.75	41.25	1,384
LAVB 17408	$29,710	262.00	45.75	41.25	1,404
LAVB 17410	$30,580	262.00	45.75	41.25	1,450
LAVB 17412	$32,060	262.00	45.75	41.25	1,497

TWO FAN WIDE MODELS	LIST PRICE	DIMENSIONS (IN) L	W	H **	SHIP WGT (LB)
-	-	-	-	-	-
-	-	-	-	-	-
-	-	-	-	-	-
-	-	-	-	-	-
-	-	-	-	-	-
-	-	-	-	-	-
-	-	-	-	-	-
-	-	-	-	-	-
-	-	-	-	-	-
LAVB 22208	$14,840	75.00	87.63	41.25	642
LAVB 22210	$15,260	75.00	87.63	41.25	654
LAVB 22212	$15,970	75.00	87.63	41.25	666
LAVB 22308	$17,780	75.00	87.63	41.25	845
LAVB 22310	$18,290	75.00	87.63	41.25	865
LAVB 22312	$19,150	75.00	87.63	41.25	885
LAVB 22408	$19,900	75.00	87.63	41.25	895
LAVB 22410	$20,470	75.00	87.63	41.25	925
LAVB 22412	$21,450	75.00	87.63	41.25	953
LAVB 23308	$21,380	111.00	87.63	41.25	1,088
LAVB 23310	$22,010	111.00	87.63	41.25	1,118
LAVB 23312	$23,050	111.00	87.63	41.25	1,148
LAVB 23408	$26,600	111.00	87.63	41.25	1,185
LAVB 23410	$27,380	111.00	87.63	41.25	1,225
LAVB 23412	$28,720	111.00	87.63	41.25	1,265
LAVB 24308	$30,530	147.00	87.63	41.25	1,665
LAVB 24310	$31,430	147.00	87.63	41.25	1,705
LAVB 24312	$32,970	147.00	87.63	41.25	1,745
LAVB 24408	$31,170	147.00	87.63	41.25	1,771
LAVB 24410	$32,110	147.00	87.63	41.25	1,825
LAVB 24412	$36,660	147.00	87.63	41.25	1,880
LAVB 25308	$36,740	183.00	87.63	41.25	1,672
LAVB 25310	$37,840	183.00	87.63	41.25	1,722
LAVB 25312	$39,670	183.00	87.63	41.25	1,772
LAVB 25408	$40,970	183.00	87.63	41.25	1,859
LAVB 25410	$42,210	183.00	87.63	41.25	1,925
LAVB 25412	$44,270	183.00	87.63	41.25	1,991
LAVB 26308	$41,160	219.00	87.63	41.25	2,035
LAVB 26310	$42,390	219.00	87.63	41.25	2,095
LAVB 26312	$43,350	219.00	87.63	41.25	2,155
LAVB 26408	$47,520	219.00	87.63	41.25	2,145
LAVB 26410	$48,950	219.00	87.63	41.25	2,225
LAVB 26412	$51,350	219.00	87.63	41.25	2,305
LAVB 27308	$49,470	255.00	87.63	41.25	2,655
LAVB 27310	$50,960	255.00	87.63	41.25	2,725
LAVB 27312	$53,460	255.00	87.63	41.25	2,795
LAVB 27408	$58,010	255.00	87.63	41.25	2,835
LAVB 27410	$59,770	255.00	87.63	41.25	2,925
LAVB 27412	$62,710	255.00	87.63	41.25	3,015

** Height includes 18 inch legs.*

Prices for Horizontal and Vertical Air Flow are the same with nomenclature changing from 'LAVB' to 'LAHB'.

Prices, product availability, and specifications are subject to change without notice.

LEVITOR II MODEL - LAVB

COATING AND SPECIAL FIN OPTION PRICING (LAVB ONLY)

ONE FAN WIDE MODELS	ELECTROFIN COATED COIL	POLYESTER FIN COATING	COPPER FIN
LAVB 11208	$930	$760	$1,820
LAVB 11210	$930	$780	$1,880
LAVB 11212	$930	$800	$1,930
LAVB 11308	$1,040	$830	$1,920
LAVB 11310	$1,040	$860	$1,980
LAVB 11312	$1,040	$880	$2,050
LAVB 11408	$1,070	$870	$2,060
LAVB 11410	$1,070	$890	$2,120
LAVB 11412	$1,070	$920	$2,170
LAVB 12208	$1,280	$1,040	$2,550
LAVB 12210	$1,280	$1,070	$2,630
LAVB 12212	$1,280	$1,110	$2,710
LAVB 12308	$1,560	$1,260	$3,070
LAVB 12310	$1,560	$1,300	$3,170
LAVB 12312	$1,560	$1,340	$3,260
LAVB 12408	$1,760	$1,430	$3,470
LAVB 12410	$1,760	$1,470	$3,570
LAVB 12412	$1,760	$1,520	$3,680
LAVB 13308	$1,910	$1,550	$3,760
LAVB 13310	$1,910	$1,600	$3,860
LAVB 13312	$1,910	$1,640	$3,980
LAVB 13408	$2,390	$1,930	$4,700
LAVB 13410	$2,390	$2,000	$4,850
LAVB 13412	$2,390	$2,060	$5,000
LAVB 14308	$2,860	$2,230	$5,420
LAVB 14310	$2,860	$2,290	$5,580
LAVB 14312	$2,860	$2,360	$5,750
LAVB 14408	$2,800	$2,270	$5,550
LAVB 14410	$2,800	$2,340	$5,720
LAVB 14412	$2,800	$2,400	$5,900
LAVB 15308	$3,340	$2,700	$6,570
LAVB 15310	$3,340	$2,780	$6,770
LAVB 15312	$3,340	$2,860	$6,970
LAVB 15408	$3,740	$3,010	$7,350
LAVB 15410	$3,740	$3,110	$7,570
LAVB 15412	$3,740	$3,200	$7,800
LAVB 16308	$3,750	$3,020	$7,380
LAVB 16310	$3,750	$3,120	$7,610
LAVB 16312	$3,750	$3,210	$7,830
LAVB 16408	$4,340	$3,510	$8,560
LAVB 16410	$4,340	$3,610	$8,820
LAVB 16412	$4,340	$3,730	$9,090
LAVB 17308	$4,540	$3,660	$8,900
LAVB 17310	$4,540	$3,780	$9,180
LAVB 17312	$4,540	$3,900	$9,450
LAVB 17408	$5,320	$4,310	$10,500
LAVB 17410	$5,320	$4,430	$10,820
LAVB 17412	$5,320	$4,570	$11,140

TWO FAN WIDE MODELS	ELECTROFIN COATED COIL	POLYESTER FIN COATING	COPPER FIN
LAVB 22208	$2,580	$2,090	$5,030
LAVB 22210	$2,580	$2,150	$5,190
LAVB 22212	$2,580	$2,220	$5,340
LAVB 22308	$3,120	$2,520	$6,120
LAVB 22310	$3,120	$2,600	$6,310
LAVB 22312	$3,120	$2,680	$6,500
LAVB 22408	$3,530	$2,850	$6,900
LAVB 22410	$3,530	$2,940	$7,110
LAVB 22412	$3,530	$3,020	$7,330
LAVB 23308	$3,820	$3,090	$7,430
LAVB 23310	$3,820	$3,190	$7,670
LAVB 23312	$3,820	$3,280	$7,900
LAVB 23408	$4,800	$3,890	$9,360
LAVB 23410	$4,800	$4,000	$9,640
LAVB 23412	$4,800	$4,130	$9,930
LAVB 24308	$5,500	$4,450	$10,780
LAVB 24310	$5,500	$4,590	$11,120
LAVB 24312	$5,500	$4,740	$11,460
LAVB 24408	$5,610	$4,540	$11,030
LAVB 24410	$5,610	$4,670	$11,360
LAVB 24412	$5,610	$4,820	$11,710
LAVB 25308	$6,670	$5,400	$13,060
LAVB 25310	$6,670	$5,550	$13,460
LAVB 25312	$6,670	$5,730	$13,870
LAVB 25408	$7,460	$6,040	$14,620
LAVB 25410	$7,460	$6,220	$15,070
LAVB 25412	$7,460	$6,410	$15,520
LAVB 26308	$7,490	$6,060	$14,670
LAVB 26310	$7,490	$6,240	$15,120
LAVB 26312	$7,490	$6,430	$15,580
LAVB 26408	$8,670	$7,010	$17,010
LAVB 26410	$8,670	$7,220	$17,520
LAVB 26412	$8,670	$7,440	$18,060
LAVB 27308	$9,050	$7,330	$17,720
LAVB 27310	$9,050	$7,550	$18,280
LAVB 27312	$9,050	$7,780	$18,830
LAVB 27408	$10,630	$8,590	$20,850
LAVB 27410	$10,630	$8,850	$21,500
LAVB 27412	$10,630	$9,140	$22,140

** Polyester fin coating is a vinyl coated fin material.*

Prices, product availability, and specifications are subject to change without notice.

LEVITOR II PRODUCT DESCRIPTION - AIR-COOLED CONDENSERS

Version: August 2025

LEVITOR II MODEL - LAV

LEVITOR II MODELS LAV (A, C, E, or F) (NOT LAVB or LAVK)

ONE FAN WIDE MODELS	LIST PRICE	DIMENSIONS (IN) L	W	H **	SHIP WGT (LB)
LAV* 11208	$7,890	58.00	45.25	54.00	437
LAV* 11210	$7,960	58.00	45.25	54.00	439
LAV* 11212	$8,050	58.00	45.25	54.00	444
LAV* 11308	$8,450	58.00	45.25	54.00	466
LAV* 11310	$8,530	58.00	45.25	54.00	469
LAV* 11312	$8,620	58.00	45.25	54.00	478
LAV* 11408	$8,710	58.00	45.25	54.00	495
LAV* 11410	$8,790	58.00	45.25	54.00	499
LAV* 11412	$8,870	58.00	45.25	54.00	508
LAV* 12208	$10,760	112.00	45.25	54.00	718
LAV* 12210	$10,930	112.00	45.25	54.00	721
LAV* 12212	$11,110	112.00	45.25	54.00	729
LAV* 12308	$11,440	112.00	45.25	54.00	773
LAV* 12310	$11,660	112.00	45.25	54.00	779
LAV* 12312	$12,070	112.00	45.25	54.00	792
LAV* 12408	$14,000	112.00	45.25	54.00	830
LAV* 12410	$14,550	112.00	45.25	54.00	838
LAV* 12412	$15,080	112.00	45.25	54.00	855
LAV* 13210	$15,840	166.00	45.25	54.00	1,041
LAV* 13212	$16,180	166.00	45.25	54.00	1,060
LAV* 13308	$16,510	166.00	45.25	54.00	1,126
LAV* 13310	$16,850	166.00	45.25	54.00	1,135
LAV* 13312	$17,390	166.00	45.25	54.00	1,153
LAV* 13408	$19,450	166.00	45.25	54.00	1,210
LAV* 13410	$20,190	166.00	45.25	54.00	1,223
LAV* 13412	$20,960	166.00	45.25	54.00	1,247
LAV* 14308	$21,760	220.00	45.25	54.00	1,437
LAV* 14310	$21,940	220.00	45.25	54.00	1,449
LAV* 14312	$22,770	220.00	45.25	54.00	1,474
LAV* 14408	$25,580	220.00	45.25	54.00	1,550
LAV* 14410	$26,200	220.00	45.25	54.00	1,566
LAV* 14412	$27,520	220.00	45.25	54.00	1,599
LAV* 15308	$30,460	274.00	45.25	58.50	2,020
LAV* 15310	$30,880	274.00	45.25	58.50	2,035
LAV* 15312	$31,310	274.00	45.25	58.50	2,066
LAV* 15408	$31,710	274.00	45.25	58.50	2,160
LAV* 15410	$33,000	274.00	45.25	58.50	2,181
LAV* 15412	$34,290	274.00	45.25	58.50	2,222
LEV* 16308	$35,530	328.00	45.25	58.50	2,554
LEV* 16310	$36,030	328.00	45.25	58.50	2,573
LEV* 16312	$36,550	328.00	45.25	58.50	2,610
LEV* 16408	$37,050	328.00	45.25	58.50	2,784
LEV* 16410	$37,580	328.00	45.25	58.50	2,808
LEV* 16412	$38,060	328.00	45.25	58.50	2,858
LEV* 17308	$42,090	382.00	45.25	58.50	3,020
LEV* 17310	$42,690	382.00	45.25	58.50	3,042
LEV* 17312	$43,270	382.00	45.25	58.50	3,088
LEV* 17408	$43,860	382.00	45.25	58.50	3,279
LEV* 17410	$44,470	382.00	45.25	58.50	3,307
LEV* 17412	$45,070	382.00	45.25	58.50	3,366

TWO FAN WIDE MODELS	LIST PRICE	DIMENSIONS (IN) L	W	H **	SHIP WGT (LB)
-	-	-	-	-	-
-	-	-	-	-	-
-	-	-	-	-	-
-	-	-	-	-	-
-	-	-	-	-	-
-	-	-	-	-	-
-	-	-	-	-	-
-	-	-	-	-	-
-	-	-	-	-	-
LAV* 22208	$20,320	112.00	90.50	54.00	1,311
LAV* 22210	$20,660	112.00	90.50	54.00	1,320
LAV* 22212	$21,000	112.00	90.50	54.00	1,336
LAV* 22308	$21,660	112.00	90.50	54.00	1,437
LAV* 22310	$22,090	112.00	90.50	54.00	1,425
LAV* 22312	$22,930	112.00	90.50	54.00	1,462
LAV* 22408	$26,760	112.00	90.50	54.00	1,539
LAV* 22410	$27,850	112.00	90.50	54.00	1,555
LAV* 22412	$28,900	112.00	90.50	54.00	1,588
LAV* 23210	$30,420	166.00	90.50	54.00	1,875
LAV* 23212	$31,100	166.00	90.50	54.00	1,912
LAV* 23308	$31,760	166.00	90.50	54.00	2,044
LAV* 23310	$32,410	166.00	90.50	54.00	2,063
LAV* 23312	$33,510	166.00	90.50	54.00	2,100
LAV* 23408	$38,130	166.00	90.50	54.00	2,214
LAV* 23410	$39,090	166.00	90.50	54.00	2,238
LAV* 23412	$40,600	166.00	90.50	54.00	2,287
LAV* 24308	$42,210	220.00	90.50	54.00	2,526
LAV* 24310	$42,580	220.00	90.50	54.00	2,651
LAV* 24312	$44,190	220.00	90.50	54.00	2,700
LAV* 24408	$49,780	220.00	90.50	54.00	2,851
LAV* 24410	$51,010	220.00	90.50	54.00	2,884
LAV* 24412	$53,640	220.00	90.50	54.00	2,950
LAV* 25308	$59,490	274.00	90.50	58.50	3,725
LAV* 25310	$60,340	274.00	90.50	58.50	3,755
LAV* 25312	$61,180	274.00	90.50	58.50	3,817
LAV* 25408	$62,000	274.00	90.50	58.50	4,005
LAV* 25410	$64,530	274.00	90.50	58.50	4,046
LAV* 25412	$67,110	274.00	90.50	58.50	4,129
LEV* 26308	$69,610	328.00	90.50	58.50	4,759
LEV* 26310	$70,610	328.00	90.50	58.50	4,796
LEV* 26312	$71,620	328.00	90.50	58.50	4,870
LEV* 26408	$72,650	328.00	90.50	58.50	5,218
LEV* 26410	$73,660	328.00	90.50	58.50	5,268
LEV* 26412	$74,650	328.00	90.50	58.50	5,366
LEV* 27308	$81,550	382.00	90.50	58.50	5,757
LEV* 27310	$82,720	382.00	90.50	58.50	5,794
LEV* 27312	$85,080	382.00	90.50	58.50	5,868
LEV* 27408	$86,230	382.00	90.50	58.50	6,216
LEV* 27410	$87,440	382.00	90.50	58.50	6,266
LEV* 27412	$88,670	382.00	90.50	58.50	6,364

** A, C, E, F or K to specify fan speed and type.*

*** Height includes 22 inch legs.*

Prices for Horizontal and Vertical Air Flow are the same with nomenclature changing from 'LAV' to 'LAH'.

Prices, product availability, and specifications are subject to change without notice.

LEVITOR II PRODUCT DESCRIPTION - AIR-COOLED CONDENSERS

Version: August 2025

LEVITOR II MODEL - LAVK

LEVITOR II MODELS LAVK / LEVK (1.5 HP, 1140 RPM, BPM MOTOR AND PANEL MOUNTED DRIVE)

ONE FAN WIDE MODELS	LIST PRICE	DIMENSIONS (IN) L	W	H *	SHIP WGT (LB)	TWO FAN WIDE MODELS	LIST PRICE	DIMENSIONS (IN) L	W	H **	SHIP WGT (LB)
LAVK 11208	$11,130	58.00	45.25	54.00	437	-	-	-	-	-	-
LAVK 11210	$11,220	58.00	45.25	54.00	439	-	-	-	-	-	-
LAVK 11212	$11,320	58.00	45.25	54.00	444	-	-	-	-	-	-
LAVK 11308	$11,710	58.00	45.25	54.00	466	-	-	-	-	-	-
LAVK 11310	$11,810	58.00	45.25	54.00	469	-	-	-	-	-	-
LAVK 11312	$11,880	58.00	45.25	54.00	478	-	-	-	-	-	-
LAVK 11408	$11,970	58.00	45.25	54.00	495	-	-	-	-	-	-
LAVK 11410	$12,050	58.00	45.25	54.00	499	-	-	-	-	-	-
LAVK 11412	$12,140	58.00	45.25	54.00	508	-	-	-	-	-	-
LAVK 12208	$15,900	112.00	45.25	54.00	718	LAVK 22208	$29,370	112.00	90.50	54.00	1,311
LAVK 12210	$16,060	112.00	45.25	54.00	721	LAVK 22210	$29,700	112.00	90.50	54.00	1,320
LAVK 12212	$16,240	112.00	45.25	54.00	729	LAVK 22212	$30,040	112.00	90.50	54.00	1,336
LAVK 12308	$16,570	112.00	45.25	54.00	773	LAVK 22308	$30,710	112.00	90.50	54.00	1,437
LAVK 12310	$16,790	112.00	45.25	54.00	779	LAVK 22310	$31,130	112.00	90.50	54.00	1,425
LAVK 12312	$17,210	112.00	45.25	54.00	792	LAVK 22312	$31,970	112.00	90.50	54.00	1,462
LAVK 12408	$19,150	112.00	45.25	54.00	830	LAVK 22408	$35,800	112.00	90.50	54.00	1,539
LAVK 12410	$19,690	112.00	45.25	54.00	838	LAVK 22410	$36,890	112.00	90.50	54.00	1,555
LAVK 12412	$20,220	112.00	45.25	54.00	855	LAVK 22412	$37,940	112.00	90.50	54.00	1,588
LAVK 13210	$22,890	166.00	45.25	54.00	1,041	LAVK 23210	$44,010	166.00	90.50	54.00	1,875
LAVK 13212	$23,230	166.00	45.25	54.00	1,060	LAVK 23212	$44,680	166.00	90.50	54.00	1,912
LAVK 13308	$23,560	166.00	45.25	54.00	1,126	LAVK 23308	$45,530	166.00	90.50	54.00	2,044
LAVK 13310	$23,890	166.00	45.25	54.00	1,135	LAVK 23310	$45,990	166.00	90.50	54.00	2,063
LAVK 13312	$24,430	166.00	45.25	54.00	1,153	LAVK 23312	$47,100	166.00	90.50	54.00	2,100
LAVK 13408	$26,500	166.00	45.25	54.00	1,210	LAVK 23408	$51,720	166.00	90.50	54.00	2,214
LAVK 13410	$27,230	166.00	45.25	54.00	1,223	LAVK 23410	$52,670	166.00	90.50	54.00	2,238
LAVK 13412	$28,000	166.00	45.25	54.00	1,247	LAVK 23412	$54,180	166.00	90.50	54.00	2,287
LAVK 14308	$31,070	220.00	45.25	54.00	1,437	LAVK 24308	$59,520	220.00	90.50	54.00	2,526
LAVK 14310	$31,260	220.00	45.25	54.00	1,449	LAVK 24310	$59,890	220.00	90.50	54.00	2,651
LAVK 14312	$32,090	220.00	45.25	54.00	1,474	LAVK 24312	$61,510	220.00	90.50	54.00	2,700
LAVK 14408	$34,890	220.00	45.25	54.00	1,550	LAVK 24408	$67,090	220.00	90.50	54.00	2,851
LAVK 14410	$35,500	220.00	45.25	54.00	1,566	LAVK 24410	$68,320	220.00	90.50	54.00	2,884
LAVK 14412	$36,830	220.00	45.25	54.00	1,599	LAVK 24412	$70,970	220.00	90.50	54.00	2,950
LAVK 15308	$42,580	274.00	45.25	58.50	2,020	LAVK 25308	$80,580	274.00	90.50	58.50	3,725
LAVK 15310	$43,000	274.00	45.25	58.50	2,035	LAVK 25310	$81,430	274.00	90.50	58.50	3,755
LAVK 15312	$43,430	274.00	45.25	58.50	2,066	LAVK 25312	$82,270	274.00	90.50	58.50	3,817
LAVK 15408	$43,830	274.00	45.25	58.50	2,160	LAVK 25408	$83,080	274.00	90.50	58.50	4,005
LAVK 15410	$45,120	274.00	45.25	58.50	2,181	LAVK 25410	$85,620	274.00	90.50	58.50	4,046
LAVK 15412	$46,410	274.00	45.25	58.50	2,222	LAVK 25412	$88,200	274.00	90.50	58.50	4,129
LEVK 16308	$49,850	328.00	45.25	58.50	2,554	LEVK 26308	$94,710	328.00	90.50	58.50	4,759
LEVK 16310	$50,360	328.00	45.25	58.50	2,573	LEVK 26310	$95,690	328.00	90.50	58.50	4,796
LEVK 16312	$50,870	328.00	45.25	58.50	2,610	LEVK 26312	$96,710	328.00	90.50	58.50	4,870
LEVK 16408	$51,380	328.00	45.25	58.50	2,784	LEVK 26408	$97,740	328.00	90.50	58.50	5,218
LEVK 16410	$51,900	328.00	45.25	58.50	2,808	LEVK 26410	$98,750	328.00	90.50	58.50	5,268
LEVK 16412	$52,390	328.00	45.25	58.50	2,858	LEVK 26412	$99,750	328.00	90.50	58.50	5,366
LEVK 17308	$58,390	382.00	45.25	58.50	3,020	LEVK 27308	$110,160	382.00	90.50	58.50	5,757
LEVK 17310	$58,980	382.00	45.25	58.50	3,042	LEVK 27310	$111,330	382.00	90.50	58.50	5,794
LEVK 17312	$59,560	382.00	45.25	58.50	3,088	LEVK 27312	$113,680	382.00	90.50	58.50	5,868
LEVK 17408	$60,140	382.00	45.25	58.50	3,279	LEVK 27408	$114,840	382.00	90.50	58.50	6,216
LEVK 17410	$60,750	382.00	45.25	58.50	3,307	LEVK 27410	$116,060	382.00	90.50	58.50	6,266
LEVK 17412	$61,370	382.00	45.25	58.50	3,366	LEVK 27412	$117,280	382.00	90.50	58.50	6,364

** Height includes 22 inch legs.*

Gravity dampers should not be used with K motor applications.

Prices for Horizontal and Vertical Air Flow are the same with nomenclature changing from 'LAV' to 'LAH'.

Prices, product availability, and specifications are subject to change without notice.

LEVITOR II CONTROL PANEL NOMENCLATURE

CPC	PT	B	3	3	1	N	R

RELAY BOARD (optional)
A, B, C, E, F Motor
N - None
CPC - 8RO board
CPC1 - Multiflex 88
CPC2 - Multiflex 88AO
AKC - Danfoss 88 w/AKC-SC355/255
AKS - Danfoss 88 w/AKS-SM800
MTH - Microthermo 508
MTH1 - Microthermo 722F and 784A
NOV - Novar
K Motor***
N - None
CPC2 - Multiflex 88AO
HSM - HSM Controller
MTH1 - Microthermo 722F and 784A
DAN - Danfoss

BACKUP CONTROLLER
A, B, C, E, F Motor
NC - No Controls
PT - PressureControls
TF - Temperature Controls
TP - Temp. and Pressure Controls
PV - Pressure Controls w/ Variable Speed*
TV - Temp. Controls w/ Variable Speed*
VN - No Controls w/ Variable Speed*
K Motor***
KB - KB Drive
CD - Copeland Drive

CONTROL VOLTAGE
A, B, C, E, F Motor
A - 208/230 V
B - 115 V
C - No Control Voltage
D - 24 V
E** - 208/230 V w/o Transformer
F** - 115 V w/o Transformer
H** - 24 V w/o Transformer
K Motor***
A - 208/230 V
B - 115 V

RECEIVER OPTION
R - Factory Mounted Receiver (R-Heated or Non-Heated)
S - Standard No Receiver

AMBIENT AIR SENSOR FOR SPLIT
A, B, C, E, F Motor
T - Sensor Provided
N - Sensor Not Required
K Motor***
T - Sensor Provided
N - Sensor Not Required

TYPE OF APPLICATION
A, B, C, E, F Motor
1 - Standard
2 - 50% Winter Reduction (Split Condenser)
3 - 50/50 Split Dual Panel (for Two Independent Slabs)
4 - No Control Operation (Terminal Blocks Only)
K Motor***
1 - Standard
2 - 50% Winter Reduction (Split Condenser)
3 - 50/50 Split Dual Panel (for Two Independent Slabs)

FUSES AND BREAKERS
A, B, C, E, F Motor
1 - Individual Fuses and Contactors
2 - Individual Circuit Breakers and Contactors per Fan 3 - Fuses and Contactors per Pair of Fans
4 - Terminal Blocks Only
5 - Circuit Breaker and Contactor per Pair of Fans
6 - Fuses Only per Motor
8 - High SCCR, Individual Fuses and Contactors
9 - High SCCR, Fuses and Contactors Per Pair of Fans
K Motor***
6 - Fuses Only per Motor

BACKUP CONTROL TYPE
A, B, C, E, F Motor
3 - Johnson Electric
4 - No Controls
K Motor***
4 - No Controls

* Variable Speed - Header End Fans only
** Without Transformer - Control Voltage from source outside of Condenser Control Panel
*** LEVITOR II MODELS LAVK / LEVK (1.5 HP, 1,140 RPM, BPM MOTOR, AND PANEL MOUNTED DRIVE)

Prices, product availability, and specifications are subject to change without notice.

LEVITOR II OPTIONS - LAV

LEG OPTIONS - LAV (A, C, E, F or K MODELS) - *Except LAVB*

FAN CONFIGURATION	DEDUCT FOR NO LEGS	15" LEGS	22" LEGS	30" LEGS	36" LEGS	42" LEGS	48" LEGS	60" LEGS
1 X 1	($80)	N/C	STD	$200	$200	$200	$1,440	$2,090
1 X 2	($80)	N/C	STD	$200	$200	$200	$2,160	$3,120
1 X 3	($120)	N/C	STD	$300	$300	$300	$2,890	$4,180
1 X 4	($120)	N/C	STD	$300	$300	$300	$3,600	$5,220
1 X 5	($120)	N/C	STD	$390	$390	$390	$4,320	$6,240
1 X 6	($160)	N/C	STD	$390	$390	$390	$5,040	$7,280
1 X 7	($200)	N/C	STD	$490	$490	$490	$5,760	$8,320
2 X 2	($80)	N/C	STD	$200	$200	$200	$2,160	$3,120
2 X 3	($120)	N/C	STD	$300	$300	$300	$2,890	$4,150
2 X 4	($120)	N/C	STD	$300	$300	$300	$3,600	$5,190
2 X 5	($160)	N/C	STD	$390	$390	$390	$4,320	$6,240
2 X 6	($160)	N/C	STD	$390	$390	$390	$5,040	$7,280
2 X 7	($200)	N/C	STD	$490	$490	$490	$5,760	$8,300

- 48 inch legs include gussets.
- 60 inch legs include gussets and cross bracing.

FAN CONFIGURATION	HINGED FAN PANEL	GRAVITY DAMPERS	PAINTED HOUSING*
1 X 1	$390	$760	$990
1 X 2	$780	$1,520	$1,970
1 X 3	$1,170	$2,280	$2,960
1 X 4	$1,550	$3,040	$3,950
1 X 5	$1,940	$3,800	$4,940
1 X 6	$2,330	$4,560	$5,920
1 X 7	$2,720	$5,320	$6,910
2 X 2	$1,550	$3,040	$3,800
2 X 3	$2,330	$4,560	$5,700
2 X 4	$3,110	$6,080	$7,600
2 X 5	$3,890	$7,600	$9,500
2 X 6	$4,660	$9,120	$11,400
2 X 7	$5,440	$10,640	$13,300

** White or beige are available. COD required for any other color.*
- Gravity dampers are NOT available on horizontal air throw units.

Prices, product availability, and specifications are subject to change without notice.

LEVITOR II CONTROL PANELS

**** The Heading of Each Column is the Fan Controls and the Last Three Numbers in the Control Panel Nomenclature.***

FAN CONFIGURATION	TF, PT, TP *311	TF, PT, TP *331	NC *411	NC *421	NC *431	NC *461
1 X 1	$1,300	-	$1,000	$1,450	-	$660
1 X 2	$1,860	-	$1,260	$2,160	-	$870
1 X 3	$2,380	-	$1,330	$2,680	-	$880
1 X 4	$2,930	-	$1,720	$3,520	-	$1,210
1 X 5	$3,440	-	$1,960	$4,210	-	$1,380
1 X 6	$3,940	-	$2,170	$4,870	-	$1,530
1 X 7	$4,450	-	$2,380	$5,530	-	$1,670
2 X 2	$2,810	$2,000	$2,240	$4,040	$1,400	$1,710
2 X 3	$3,760	$2,530	$2,880	$5,580	$1,650	$2,230
2 X 4	$4,670	$3,050	$3,510	$7,110	$1,890	$2,720
2 X 5	$5,580	$3,580	$4,080	$8,580	$2,120	$3,170
2 X 6	$6,460	$4,080	$4,690	$10,090	$2,310	$3,640
2 X 7	$7,350	$4,580	$5,280	$11,580	$2,530	$4,120

FAN CONFIGURATION	TF, PT, TP *381	TF, PT, TP * 391	NC *481	NC *491
1 X 1	$2,670		$2,370	
1 X 2	$4,340		$3,740	
1 X 3	$5,970		$4,920	
1 X 4	$7,840		$6,630	
1 X 5	$9,460		$7,980	
1 X 6	$10,970		$9,200	
1 X 7	$12,770		$10,700	
2 X 2	$7,720	$4,480	$7,150	$3,880
2 X 3	$10,790	$6,120	$9,910	$5,240
2 X 4	$14,100	$7,960	$12,940	$6,800
2 X 5	$17,460	$9,600	$15,960	$8,140
2 X 6	$20,750	$11,110	$18,980	$9,340
2 X 7	$23,860	$12,900	$21,790	$10,850

OPTIONS	ADD $
50 / 50 Split (2X Only) For Independent Slab Operation	**Two 1 x Panels**
50% Winter Reduction Relay (2X Only)	$290
Phase Loss Monitor — already included	$0
Circuit Breakers: Per Breaker	$450
NEMA Contactor: Per Contactor	$390
Mounted **Non-Fused** Disconnect	$1,860
Mounted **Fused** Disconnect (100 Amp or Less)	$2,070
VFD Power Distribution Block	$650
115 Volt GFI Outlet (Not Wired)	$1,070
115 Volt GFI Outlet (Wired with Transformer)	$1,820
**PV, TV, VN, Variable Speed (1X Only) (Plus Control Panel)	$1,580
**PV, TV, VN, Variable Speed (2X Only) (Plus Control Panel)	$2,650
Control Circuit 10 Amp Disconnect	$340
Drop Leg Transducer Tap with Pressure Transducer	$1,610
Drop Leg Pressure Transducer Tap ONLY	$330
Rochester Liquid Level Gauge with Alarm Contact	$2,940
Rupture Disc Assembly	$1,280
RELAY BOARDS	
CPC - 8RO Relay Board	$2,720
CPC1 - Multiflex 88 Board	$3,240
CPC2 - Multiflex 88AO Board	$3,650
AKC - Danfoss 88 Board and Comm - AK2-XM205B(TP78-Old)***	$2,720
AKS - Danfoss 88 Board and Comm - AK2-XM205B (RS485)***	$2,720
DAN - Danfoss MX06D with Transducer and Temp Sensor	$2,650
MTH - Microthermo - MT-508	$2,720
MTH1 - Microthermo - MT-722F / 784A	$4,450
NOV - Novar #7330130	$2,720
HSM - Hussmann Controller with Transducer and Temperature Sensor	$2,290
Ambient Air Sensor - CPC, Danfoss, Novar (Shipped Loose)	$350
Ambient Air Sensor - CPC, Danfoss, Novar (Mounted)	$640

CONTROL DESCRIPTION

MODEL 311

Individual Fuses and Contactors,
Plus Fan Cycling Controls

MODEL 331

Fuses and Contactors per Pair of Fans,
Plus Fan Cycle Controls

MODEL 411

No Fan Cycle Controls,
Individual Fuses and Contactors

MODEL 421

No Fan Cycle Controls,
Individual Circuit breakers and Contactors

MODEL 431

No Fan Cycle Controls,
Fuses and Contactors per Pair of Fans

MODEL 412****

No Fan Cycle Controls,
Fuses and Contactors per Fan,
Winter Reduction Relay
50 / 50 Split Condenser

MODEL 413****

No Fan Cycle Controls,
Fuses and Contactors per Fan
50 / 50 Split Control Panel

MODEL 461

No Fan Cycle Controls

Individual Fuses
(Use with Vspeed - LAVK)

MODEL 462

No Fan Cycle Controls
Individual Fuses
50% winter reduction
(Use with VSpeed - LAVK)

INVERTER DUTY SUITABLE MOTORS ARE NOW STANDARD ON LEVITOR SERIES FOR 208-230/3/60, 460/3/60 AND 575/3/60 VOLTAGES WITH 'F' 1140 RPM and 'A' 850 RPM 1.0 HP MOTORS.

***** When selecting PV, TV, VN option, additional corresponding control panel(s) must be added.*** **This is a variable speed, header end fan only. All other fans will be standard.**

****** Controller model required to provide correct com module.***

****** Use Model 411 as base pricing and options as needed. Check valves needs to be added when Model 412 and factory installed receiver selected.**

Prices, product availability, and specifications are subject to change without notice.

LEVITOR II OPTIONS - LAV

LAV - COIL COATING AND SPECIAL FIN OPTION FOR MODELS (A, C, E, F, or K) - *Except LAVB*

SINGLE WIDE MODELS	ELECTROFIN COATED COIL	POLYESTER FIN COATING*	COPPER FIN
11208	$1,140	$930	$2,500
11210	$1,140	$950	$2,520
11212	$1,140	$970	$2,550
11308	$1,250	$1,030	$2,700
11310	$1,250	$1,040	$2,730
11312	$1,250	$1,050	$2,760
11408	$1,280	$1,060	$2,790
11410	$1,280	$1,070	$2,820
11412	$1,280	$1,080	$2,860
12208	$1,630	$1,330	$3,550
12210	$1,630	$1,350	$3,610
12212	$1,630	$1,380	$3,660
12308	$1,750	$1,430	$3,790
12310	$1,750	$1,460	$3,870
12312	$1,750	$1,520	$4,030
12408	$2,240	$1,760	$4,740
12410	$2,240	$1,870	$4,940
12412	$2,240	$1,930	$5,130
13210	$2,440	$2,030	$5,420
13212	$2,440	$2,080	$5,520
13308	$2,600	$2,130	$5,670
13310	$2,600	$2,170	$5,780
13312	$2,600	$2,250	$5,960
13408	$3,160	$2,530	$6,730
13410	$3,160	$2,640	$7,010
13412	$3,160	$2,730	$7,290
14308	$3,440	$2,850	$7,570
14310	$3,440	$2,880	$7,650
14312	$3,440	$2,980	$7,950
14408	$4,160	$3,360	$8,970
14410	$4,160	$3,470	$9,200
14412	$4,160	$3,630	$9,680
15308	$4,920	$4,050	$10,750
15310	$4,920	$4,110	$10,920
15312	$4,920	$4,160	$11,080
15408	$5,270	$4,210	$11,220
15410	$5,270	$4,390	$11,690
15412	$5,270	$4,570	$12,170
16308	$5,780	$4,740	$12,620
16310	$5,780	$4,820	$12,810
16312	$5,780	$4,880	$13,000
16408	$6,040	$4,950	$13,180
16410	$6,040	$5,030	$13,360
16412	$6,040	$5,090	$13,550
17308	$35,340	$5,420	$14,490
17310	$35,340	$5,530	$14,700
17312	$35,340	$5,610	$14,920
17408	$41,450	$5,680	$15,130
17410	$41,450	$5,670	$15,030
17412	$41,450	$5,620	$14,920

DOUBLE WIDE MODELS	ELECTROFIN COATED COIL	POLYESTER FIN COATING*	COPPER FIN
-	-	-	-
-	-	-	-
-	-	-	-
-	-	-	-
-	-	-	-
-	-	-	-
-	-	-	-
-	-	-	-
-	-	-	-
22208	$3,260	$2,670	$7,060
22210	$3,260	$2,710	$7,160
22212	$3,260	$2,760	$7,300
22308	$3,500	$2,880	$7,540
22310	$3,500	$2,920	$7,700
22312	$3,500	$3,020	$8,000
22408	$4,480	$3,550	$9,410
22410	$4,480	$3,740	$9,810
22412	$4,480	$3,860	$10,190
23210	$4,890	$4,070	$10,730
23212	$4,890	$4,160	$10,990
23308	$5,200	$4,250	$11,250
23310	$5,200	$4,340	$11,490
23312	$5,200	$4,490	$11,890
23408	$6,320	$5,070	$13,570
23410	$6,320	$5,260	$13,920
23412	$6,320	$5,470	$14,480
24308	$6,890	$5,700	$15,070
24310	$6,890	$5,740	$15,200
24312	$6,890	$5,960	$15,800
24408	$8,300	$6,740	$17,830
24410	$8,300	$6,910	$18,290
24412	$8,300	$7,290	$19,270
25308	$9,840	$8,100	$21,400
25310	$9,840	$8,200	$21,710
25312	$9,840	$8,320	$22,020
25408	$10,520	$8,430	$22,310
25410	$10,520	$8,770	$23,250
25412	$10,520	$9,120	$24,200
26308	$11,560	$9,470	$25,110
26310	$11,560	$9,630	$25,470
26312	$11,560	$9,770	$25,840
26408	$12,060	$9,900	$26,220
26410	$12,060	$10,060	$26,580
26412	$12,060	$10,170	$26,940
27308	$70,680	$10,850	$28,810
27310	$70,680	$11,060	$29,230
27312	$70,680	$11,210	$29,660
27408	$82,900	$11,370	$30,120
27410	$82,900	$11,350	$29,900
27412	$82,900	$11,220	$29,680

** Polyester fin coating is a vinyl coated fin material.*

Prices, product availability, and specifications are subject to change without notice.

LEVITOR II RECEIVER OPTIONS

CONDENSER WITH FACTORY MOUNTED RECEIVER:

Includes ORI / ORD Flooding Valve, Isolation Ball Valves, Gauge Type Liquid Level Indicator and Dual Relief Valve.

LEVITOR II MODEL	CONDENSER SIZE	MOUNTED RECEIVER WITH BASE FRAME	RECEIVER SIZE	RECEIVER HEAT TAPE AND INSULATION	RECEIVER INSULATION ONLY	BASE FRAME ONLY
LAVB 24" FAN MODEL 1 RECEIVER	1 X 1	$5,760	10.75" X 48.00"	$1,440		
	1 X 2	$6,970	10.75" X 60.00"	$1,850		
	1 X 3	$7,690	10.75" X 60.00"	$1,850		
	1 X 4	$8,800	10.75" X 60.00"	$2,020		
	1 X 5	$11,700	10.75" X 60.00"	$2,210		
	1 X 6	$12,810	10.75" X 60.00"	$2,210		
	1 X 7	$13,650	12.75" X 72.00"	$2,210		
LAVB 24" FAN MODEL 1 RECEIVER	2 X 2	$9,440	(1) 10.75" X 60.00"	$2,010		
	2 X 3	$10,410	(1) 10.75" X 60.00"	$2,010		
	2 X 4	$12,500	(1) 12.75" X 72.00"	$2,300		
	2 X 5	$15,830	(1) 12.75" X 72.00"	$2,300		
	2 X 6	$17,280	(1) 12.75" X 72.00"	$2,460		
	2 X 7	$19,440	(1) 12.75" X 72.00"	$2,460		
LAVB 24" FAN MODEL 2 RECEIVERS FOR INDEPENDENT SLAB OPERATION	2 X 2	$12,530	(2) 10.75" X 60.00"	$3,600		
	2 X 3	$13,830	(2) 10.75" X 60.00"	$3,600		
	2 X 4	$15,830	(2) 10.75" X 60.00"	$4,030		
	2 X 5	$21,020	(2) 10.75" X 60.00"	$4,030		
	2 X 6	$23,030	(2) 10.75" X 60.00"	$4,410		
	2 X 7	$24,480	(2) 12.75" X 72.00"	$4,410		
L_V( ) 30" FAN MODEL 1 RECEIVER	1 X 1	$8,640	10.75" X 60.00"	$1,440		$870
	1 X 2	$9,140	10.75" X 60.00"	$2,020		$1,330
	1 X 3	$10,980	10.75" X 60.00"	$2,020		$1,890
	1 X 4	$12,810	10.75" X 60.00"	$2,210		$2,330
	1 X 5	$14,650	12.75" X 72.00"	$2,380		$2,890
	1 X 6	$16,470	12.75" X 72.00"	$2,560		$3,330
	1 X 7	$18,230	12.75" X 72.00"	$2,750		$3,890
L_V( ) 30" FAN MODEL 1 RECEIVER	2 X 2	$14,080	(1) 10.75" X 60.00"	$2,210		$1,270
	2 X 3	$15,830	(1) 12.75" X 72.00"	$2,380		$2,090
	2 X 4	$17,580	(1) 12.75" X 72.00"	$2,380		$2,530
	2 X 5	$19,460	(1) 12.75" X 72.00"	$2,560		$3,100
	2 X 6	$21,220	(1) 12.75" X 72.00"	$2,760		$3,550
	2 X 7	$22,960	(1) 12.75" X 72.00"	$2,960		$4,220
L_V( ) 30" FAN MODEL 2 RECEIVERS FOR INDEPENDENT SLAB OPERATION	2 X 2	$16,470	(2) 10.75" X 60.00"	$3,650		
	2 X 3	$20,130	(2) 10.75" X 60.00"	$4,030		
	2 X 4	$23,790	(2) 10.75" X 60.00"	$4,410		
	2 X 5	$27,460	(2) 12.75" X 72.00"	$4,770		
	2 X 6	$31,110	(2) 12.75" X 72.00"	$5,130		
	2 X 7	$34,770	(2) 12.75" X 72.00"	$5,490		

_ A or E **( ) A, C, E, F or K**

RECEIVER OPTIONS			RECEIVER CAPACITIES: 80% FULL (LB)			
FROM RECEIVER SIZE	**TO RECEIVER SIZE**	**UPGRADE PRICE**	**RECEIVER SIZE**	**R-404A**	**R-407 (A / F / C)**	**R-448A / R-449A**
10.75" X 48.00"	10.75" X 60.00"	$420	10.75" X 48.00"	114	126	121
10.75" X 60.00"	12.75" X 72.00"	$780	10.75" X 60.00"	144	159	153
12.75" X 72.00"	14.75" X 96.00"	$1,250	12.75" X 72.00"	245	270	260
10.75" X 60.00"	14.75" X 96.00"	$2,010	14.75" X 96.00"	395	435	419
Add to Receiver and Base Frame List Price Above.						

		DEDUCT $
10.75" X 60.00"	10.75" X 48.00"	($400)
12.75" X 72.00"	10.75" X 60.00"	($740)
12.75" X 72.00"	10.75" X 48.00"	($1,140)
Deduct From Receiver and Base Frame List Price Above.		

14.75" X 96.00" Heat and Insulation*	$4,410
Drop Leg Pressure Transducer with Tap	$1,610
Drop Leg Pressure Transducer Tap ONLY	$330
Rochester Liquid Level Gauge with Alarm Contact	$2,940
Rupture Disc Assembly	$1,280

Required for 50% winter reduction.
Prices shown include 2 check valves.

CONDENSER MODEL	RECOMMENDED CHECK VALVE SIZE	LIST PRICE
LAV*-22***	1-3/8"	$600.00
LAV*-23***	1-5/8"	$820.00
LAV*-24***	1-5/8"	$820.00
LAV*-25***	1-5/8"	$820.00
LEV*-26***	2-1/8"	$1,120.00
LEV*-27***	2-1/8"	$1,120.00

** Use the upsized Heating and Insulation pricing if the receiver is also upsized.*

Prices, product availability, and specifications are subject to change without notice.

VFD SIZING / CONDENSER MOTOR AMP DRAW REFERENCE CHART

REFERENCE KEY CHART for VFD SIZE and PART NUMBER

LEVITOR & MX CONDENSERS	1 HP, 850 RPM Motor (A)		1-1/2 HP, 850 RPM Motor (C)		1/2 HP, 575 RPM Motor (E)		1-1/2 HP, 1140 RPM Motor (F)		1/2 HP, 1140 RPM Motor (B)	
	230V	460V	230V	460V	230V	460V	230V	460V	230V	460V
1-Fan	4.8	2.4	6.9	3.3	3.4	1.6	5.4	2.5	2.1	1.1
2-Fan	9.6	4.8	13.8	6.6	6.8	3.2	10.8	5.0	4.2	2.2
3-Fan	14.4	7.2	20.7	9.9	10.2	4.8	16.2	7.5	6.3	3.3
4-Fan	19.2	9.6	27.6	13.2	13.6	6.4	21.6	10.0	8.4	4.4
5-Fan	24.0	12.0	34.5	16.5	17.0	8.0	27.0	12.5	10.5	5.5
6-Fan	28.8	14.4	41.4	19.8	20.4	9.6	32.4	15.0	12.6	6.6
8-Fan	38.4	19.2	55.2	26.4	27.2	12.8	43.2	20.0	16.8	8.8
10-Fan	48.0	24.0	69.0	33.0	34.0	16.0	54.0	25.0	21.0	11.0
12-Fan	57.6	28.8	82.8	39.6	40.8	19.2	64.8	30.0	25.2	13.2
14-Fan	67.2	33.6	96.6	46.2	47.6	22.4	75.6	35.0	29.4	15.4

Note:50 / 50 split condensers with 2 independent slabs will need 2 VFDs. Each will be sized for the individual slab and not the entire coil.

VFD DANFOSS PART NUMBERS

DANFOSS VFD - NEMA 3R ENCLOSURE WITH BYPASS

							VFD can be selected				
PART #	HP	AMPS	Voltage	Danfoss Part #	Encl Size	List Price	A Motor	C Motor	E Motor	F Motor	B Motor
E209136001	5	16.7	230/3/60	RAP103005T2E3R3CMDXXX2XO	A2/A3	$16,290.00	1F, 2F	1F, 2F	1F, 2F, 3F, 4F	1F, 2F	1F, 2F, 3F, 4F, 5F
E209137001	5	8.2	460/3/60	RAP103005T4E3R3CMDXXX2XO	A2/A3	$15,980.00	1F, 2F	1F, 2F	1F, 2F, 3F, 4F	**1F, 2F**	1F, 2F, 3F, 4F, 5F
E209138001	7.5	24	230/3/60	RAP1037H5T2E3R3CMDXXX2XO	B3	$20,100.00	3F, 4F		5F	3F	6F, 8F
E209139001	7.5	11	460/3/60	RAP1037H5T4E3R3CMDXXX2XO	A2/A3	$17,050.00	3F		5F	3F	6F
E209140001	10	31	230/3/60	RAP103010T2E3R3CMDXXX2XO	B3	$21,850.00	5F	3F	6F	4F	10F
E209141001	10	14.5	460/3/60	RAP103010T4E3R3CMDXXX2XO	A2/A3	$18,120.00	4F, 5F	3F	6F	4F	8F
E209142001	15	46	230/3/60	RAP103015T2E3R3CMDXXX2XO	B4	$24,160.00	6F	4F, 5F	8F, 10F	5F, 6F	12F, 14F
E209143001	15	21	460/3/60	RAP103015T4E3R3CMDXXX2XO	B3	$22,640.00	6F	4F, 5F	8F, 10F	5F, 6F	10F, 12F
E209144001	20	59	230/3/60	RAP103020T2E3R3CMDXXX2XO	B4	$30,140.00	8F, 10F	6F	12F, 14F	8F	
E209145001	20	27	460/3/60	RAP103020T4E3R3CMDXXX2XO	B3	$23,880.00	8F	6F	12F, 14F	8F	14F
E209146001	25	75	230/3/60	RAP103025T2E3R3CMDXXX2XO	C3/C4	$42,890.00	12F	8F		10F	
E209147001	25	34	460/3/60	RAP103025T4E3R3CMDXXX2XO	B4	$27,210.00	10F	8F		10F	
E209148001	30	88	230/3/60	RAP103030T2E3R3CMDXXX2XO	C3/C4	$49,360.00	14F	10F		12F	
E209149001	30	40	460/3/60	RAP103030T4E3R3CMDXXX2XO	B4	$29,920.00	12F	10F		12F	
E209150001	40	115	230/3/60	RAP103040T2E3R3CMDXXX2XO	C3/C4	$61,040.00		12F, 14F		14F	
E209151001	40	52	460/3/60	RAP103040T4E3R3CMDXXX2XO	B4	$19,460.00	14F	12F		14F	
E209152001	50		460/3/60	RAP103050T4E3R3CMDXXX2XO	C3/C4	$30,160.00		14F			

Ship loose with optional encl stand.

E209291001	MOUNTING TABLE FOR VFD SIZE A2/A3	30x20.15x12.20	A2/A3	$4,180.00
E209232001	MOUNTING TABLE FOR VFD SIZE B3	30x20.15x13.20	B3	$3,830.00
E209238001	MOUNTING TABLE FOR VFD SIZE B4	36x24.15x13.20	B4	$3,830.00
E209246001	MOUNTING TABLE FOR VFD SIZE C3/C4	54x36.15x17.20	C3/C4	$3,730.00

Prices, product availability, and specifications are subject to change without notice.

VFD EMERSON PART NUMBERS

EMERSON VFD - NEMA 3R ENCLOSURE WITH BYPASS

						VFD can be selected				
PART #	HP	AMPS	Voltage	Emerson Part #	List Price	A Motor	C Motor	E Motor	F Motor	B Motor
3027049	5	17.6	208/3/60	HH800531210BW2A	$13,380.00	1F, 2F, 3F	1F, 2F	1F, 2F, 3F, 4F	1F, 2F	1F, 2F, 3F, 4F, 5F
3027050	10	30	208/3/60	HH801031210BW2A	$17,810.00	4F, 5F	3F	5F, 6F	3F, 4F	6F, 8F, 10F
3027051	15	50	208/3/60	HH801531210BW2A	$22,180.00	6F, 8F	4F, 5F	8F, 10F, 12F	3F, 4F	6F, 8F, 10F
3027052	20	58	208/3/60	HH802031210BW2A	$20,030.00	10F	6F	14F	8F	
3027053	25	75	208/3/60	HH802531210BW2A	$28,030.00	12F	8F		10F	
0005277	7.5	13.5	460/3/60	HH400731212BW2A	$15,540.00	1F, 2F, 3F, 4F	1F, 2F, 3F	1F, 2F, 3F, 4F, 5F, 6F	1F, 2F, 3F, 4F	1F, 2F, 3F, 4F, 5F, 6F, 8F
3027040	10	17	460/3/60	HH401031212BW2A	$20,710.00	5F	4F	8F	5F	10F
3027041	20	30	460/3/60	HH402031212BW2A	$20,660.00	6F, 8F	5F, 6F	10F, 12F, 14F	6F, 8F	12F, 14F
3012545	25	38	460/3/60	HH402531212BW2A	$22,000.00	10F, 12F	8F		10F, 12F	
3027042	30	48	460/3/60	HH403031212BW2A	$23,130.00	14F	10F, 12F		14F	

Can be mounted on MX units or ship loose for Levitor and SLD units.

E209691001	MX MOUNTING VFD KIT		$220.00

Prices, product availability, and specifications are subject to change without notice.

MX - MICROCHANNEL AIR-COOLED MODEL KEY

MX	K	-	10	M

UNIT TYPE:
MX = Microchannel

FAN/MOTOR COMBINATION:
A = 850 RPM, 1.0 HP, 30"
C = 850 RPM, 1.5 HP, 30"
E = 575 RPM, 0.5 HP, 30"
F = 1140 RPM, 1.5 HP, 30"
K = 1140 RPM, 1.5 HP, 30"*

NUMBER OF FANS:
2 10
4 12
6 14
8

MOTOR VOLTAGE:
K = 208-230/3/60
M = 460/3/60
P = 575/3/60
U = 380/3/50**

** K Vspeed Variable Speed BPM (brushless permanent magnet motors) and panel mounted electronic drive are 208-240/3/60, 380/3/50, 380/3/60, and 460/3/60. Gravity dampers should not be used with K motor applications.*

*** De-rate capacity data 10% for 50 Hz applications with all motors except K (variable speed BPM motors and panel mounted drive) which have no reduction in capacity for the change in frequency.*

Prices, product availability, and specifications are subject to change without notice.

MICROCHANNEL PRODUCT DESCRIPTION - AIR-COOLED CONDENSER

Version: August 2025

MX - MICROCHANNEL AIR-COOLED MODELS

MODEL	LIST PRICE	THR in MBH (000) @ 10° F TD R-404A / R-507A	THR in MBH (000) @ 10° F TD R-448A / R-449A	AIR FLOW (CFM)	DIMENSIONS (IN) L	W	H *	SHIP WGT (LB)	SUMMER R-404A (LB)	WINTER R-404A (LB)
0.5 HP, 575 RPM *										
MXE-02	$16,750	104.5	101.8	12,600	44.00	90.25	42.00	560	4	12
MXE-04	$29,610	209.0	203.6	25,200	88.00	90.25	42.00	1,170	15	26
MXE-06	$45,010	313.5	305.4	37,800	132.00	90.25	42.00	1,705	23	40
MXE-08	$57,400	418.0	407.2	50,400	176.00	90.25	42.00	2,280	40	55
MXE-10	$72,880	522.5	509.0	63,000	220.00	90.25	42.00	2,850	52	70
MXE-12	$91,260	627.0	610.8	75,600	264.00	90.25	42.00	3,385	80	88
MXE-14	$109,660	731.5	712.6	88,200	308.00	90.25	42.00	3,920	108	119
1.0 HP, 850 RPM										
MXA-02	$16,750	146.2	141.2	20,800	44.00	90.25	42.00	560	4	12
MXA-04	$29,610	292.4	282.4	41,600	88.00	90.25	42.00	1,170	15	26
MXA-06	$45,010	438.6	423.6	62,400	132.00	90.25	42.00	1,705	23	40
MXA-08	$57,400	584.8	564.8	83,200	176.00	90.25	42.00	2,280	40	55
MXA-10	$72,880	731.0	706.0	104,000	220.00	90.25	42.00	2,850	52	70
MXA-12	$91,260	877.2	847.2	124,800	264.00	90.25	42.00	3,385	80	88
MXA-14	$109,660	1023.4	988.4	145,600	308.00	90.25	42.00	3,920	108	119
1.5 HP, 850 RPM										
MXC-02	$16,750	153.5	149.9	22,830	44.00	90.25	42.00	560	4	12
MXC-04	$29,610	307.0	299.8	45,660	88.00	90.25	42.00	1,170	15	26
MXC-06	$45,010	460.5	449.7	68,490	132.00	90.25	42.00	1,705	23	40
MXC-08	$57,400	614.0	599.6	91,320	176.00	90.25	42.00	2,280	40	55
MXC-10	$72,880	767.5	749.5	114,150	220.00	90.25	42.00	2,850	52	70
MXC-12	$91,260	921.0	899.4	136,980	264.00	90.25	42.00	3,385	80	88
MXC-14	$109,660	1074.5	1049.3	159,010	308.00	90.25	42.00	3,920	108	119
1.5 HP, 1140 RPM										
MXF-02	$16,750	164.2	161.6	25,600	44.00	90.25	42.00	560	4	12
MXF-04	$29,610	328.4	323.2	51,200	88.00	90.25	42.00	1,170	15	26
MXF-06	$45,010	492.6	484.8	76,800	132.00	90.25	42.00	1,705	23	40
MXF-08	$57,400	656.8	646.4	102,400	176.00	90.25	42.00	2,280	40	55
MXF-10	$72,880	821.0	808.0	128,000	220.00	90.25	42.00	2,850	52	70
MXF-12	$91,260	985.2	969.6	153,600	264.00	90.25	42.00	3,385	80	88
MXF-14	$109,660	1149.4	1131.2	179,200	308.00	90.25	42.00	3,920	108	119
1.5 HP, 1140 RPM, BPM Motor and Panel Mounted Drive										
MXK-02	$21,840	164.2	161.6	25,600	44.00	90.25	42.00	560	4	12
MXK-04	$38,480	328.4	323.2	51,200	88.00	90.25	42.00	1,170	15	26
MXK-06	$58,630	492.6	484.8	76,800	132.00	90.25	42.00	1,705	23	40
MXK-08	$74,550	656.8	646.4	102,400	176.00	90.25	42.00	2,280	40	55
MXK-10	$93,750	821.0	808.0	128,000	220.00	90.25	42.00	2,850	52	70
MXK-12	$115,630	985.2	969.6	153,600	264.00	90.25	42.00	3,385	80	88
MXK-14	$137,790	1149.4	1131.2	179,200	308.00	90.25	42.00	3,920	108	119

Add 22" to height when ship loose legs are required. Add 18" to height for mounted receiver.

- MX Microchannel is a two fan modular design.

- MXA, MXC, MXF, and MXE includes Inverter Duty Suitable Fan Motors (not available on 575/3/60 volt units).

- MXK includes brushless permanent magnet (BPM) motor and panel mounted drive. Gravity dampers should not be used with K motor applications.

- 22" legs are standard on Microchannel without a receiver.

- Winter Flooding charge does not reflect module isolation valves.

Prices, product availability, and specifications are subject to change without notice.

MX - MICROCHANNEL AIR-COOLED CONTROL PANEL NOMENCLATURE

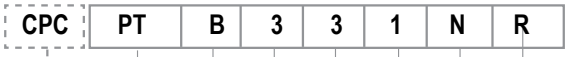

RELAY BOARD (optional)
A, B, C, E, F Motor
N - None
CPC - 8RO board
CPC1 - Multiflex 88
CPC2 - Multiflex 88AO
AKC - Danfoss 88 w/AKC-SC355/255
AKS - Danfoss 88 w/AKS-SM800
MTH - Microthermo 508
MTH1 - Microthermo 722F and 784A
NOV - Novar
K Motor
N - None
CPC2 - Multiflex 88AO
HSM - HSM Controller
MTH1 - Microthermo 722F and 784A
DAN - Danfoss

BACKUP CONTROLLER
A, B, C, E, F Motor
NC - No Controls
PT - PressureControls
TF - Temperature Controls
TP - Temp. and Pressure Controls
PV - Pressure Controls w/ Variable Speed*
TV - Temp. Controls w/ Variable Speed*
VN - No Controls w/ Variable Speed*
K Motor
KB - KB Drive
CD - Copeland Drive

CONTROL VOLTAGE
A, B, C, E, F Motor
A - 208/230 V
B - 115 V
C - No Control Voltage
D - 24 V
E - 208/230 V w/o Transformer
F - 115 V w/o Transformer
H - 24 V w/o Transformer
K Motor
A - 208/230 V
B - 115 V

RECEIVER OPTION
R - Factory Mounted Receiver (R-Heated or Non-Heated)
S - Standard No Receiver

AMBIENT AIR SENSOR FOR SPLIT
A, B, C, E, F Motor
T - Sensor Provided
N - Sensor Not Required
K Motor
T - Sensor Provided
N - Sensor Not Required

TYPE OF APPLICATION
A, B, C, E, F Motor
1 - Standard
4 - No Control Operation (Terminal Blocks Only)
5 - Modular Winter Reduction
K Motor
1 - Standard
5 - Modular Winter Reduction

FUSES AND BREAKERS
A, B, C, E, F Motor
1 - Individual Fuses and Contactors
2 - Individual Circuit Breakers and Contactors per Fan 3 - Fuses and Contactors per Pair of Fans
4 - Terminal Blocks Only
5 - Circuit Breaker and Contactor per Pair of Fans
6 - Fuses Only per Motor
8 - High SCCR, Individual Fuses and Contactors
9 - High SCCR, Fuses and Contactors per Pair of Fans
K Motor
6 - Fuses Only per Motor

BACKUP CONTROL TYPE
A, B, C, E, F Motor
3 - Johnson Electric
4 - No Controls
K Motor
4 - No Controls

* Variable Speed - Header End Fans only

Prices, product availability, and specifications are subject to change without notice.

MX - MICROCHANNEL AIR-COOLED CONTROL PANELS

MX* MODEL	TF, PT, TP 311	TF, PT, TP 331	NC 411	NC 431	NC 461	TF,PT,TP 315	TF,PT,TP 335	NC 415	NC 435	NC 445	NC 465
MX* 02	$1,860	-	$1,260	$1,000	$870	-	-	-	-	-	-
MX* 04	$2,810	$2,000	$2,240	$1,400	$1,710	$3,990	$3,180	$3,420	$2,570	$1,180	$2,900
MX* 06	$3,760	$2,530	$2,880	$1,650	$2,230	$6,100	$4,880	$5,220	$4,000	$2,350	$4,570
MX* 08	$4,670	$3,050	$3,510	$1,890	$2,720	$8,200	$6,570	$7,040	$5,420	$3,530	$6,250
MX* 10	$5,580	$3,580	$4,080	$2,120	$3,170	$10,290	$8,280	$8,780	$6,810	$4,700	$7,860
MX* 12	$6,460	$4,080	$4,690	$2,310	$3,640	$12,330	$9,950	$10,570	$8,190	$5,880	$9,520
MX* 14	$7,340	$4,590	$5,280	$2,530	$4,120	$14,400	$11,640	$12,340	$9,590	$7,060	$11,170

MX* MODEL	TF, PT, TP *381	TF, PT, TP *391	NC *481	NC *491	TF, PT, TP *385	TF, PT, TP *395	NC *485	NC *495
MX* 02	$4,340	-	$3,740	$3,480	-	-	-	-
MX* 04	$7,720	$4,480	$7,150	$3,880	$8,900	$5,660	$8,330	$5,050
MX* 06	$10,790	$6,120	$9,910	$5,240	$13,130	$8,470	$12,250	$7,590
MX* 08	$14,100	$7,960	$12,940	$6,800	$17,630	$11,480	$16,470	$10,330
MX* 10	$17,460	$9,600	$15,960	$8,140	$22,170	$14,300	$20,660	$12,830
MX* 12	$20,750	$11,110	$18,980	$9,340	$26,620	$16,980	$24,860	$15,220
MX* 14	$23,850	$12,910	$21,790	$10,850	$30,910	$19,960	$28,850	$17,910

A, E, C, F, or K** **NOTE. The heading of each column is the fan controls and the last three numbers in the Control Panel Nomenclature.

CONTROL OPTIONS	
Phase Loss Monitor — already included	$0
Circuit Breakers: Per Breaker	$450
NEMA Contactor: Per Contactor	$390
Mounted **Non-Fused** Disconnect	$1,860
Mounted **Fused** Disconnect (100 Amp or Less)	$2,070
VFD Power Distribution Block (Use When Control Transformer is Located in Condenser Control Panel)	$650
115 Volt GFI Outlet (Not Wired)	$1,070
Drop Leg Transducer Tap with Pressure Transducer	$1,610
Drop Leg Pressure Transducer Tap ONLY	$330
Rochester Liquid Level Gauge with Alarm Contact	$2,940
Rupture Disc Assembly	$1,280
RELAY BOARDS	
CPC - 8RO Relay Board	$2,720
CPC1 - Multiflex 88 Board	$3,240
CPC2 - Multiflex 88AO Board	$3,650
AKC - Danfoss 88 Board and Comm - AK2-XM205B (TP78-Old)**	$2,720
AKS - Danfoss 88 Board and Comm - AK2-XM205B (RS485)**	$2,720
DAN - Danfoss MX06D with Transducer and Temp Sensor	$2,650
MTH - Microthermo - MT-508	$2,720
MTH1 - Microthermo - MT-722F / 784A	$4,450
NOV - Novar #7330130	$2,720
Ambient Air Sensor - CPC, Danfoss, Novar (Shipped Loose)	$350
Ambient Air Sensor - CPC, Danfoss, Novar (Mounted)	$640

***** Controller model required to provide correct com module.***

Notes:
- **Inverter Duty Suitable Motors are Standard on MX (A, C, E, or F) Models with 208-230/3/60 AND 460/3/60 Voltages.**
- **Inverter Duty Standard on MXA AND MXF for 575/3/60 Voltage.**
- **Winter Isolation Valves Include Solenoid and Check Valve.**
- **Winter Isolation Solenoid Valve Not Provided on Lead Module.**

CONTROL DESCRIPTION

MODEL 311
Individual Fuses and Contactors,
Plus Fan Cycling

MODEL 331
Fuses and Contactors per Pair of Fans,
Plus Fan Cycle Controls

MODEL 411
No Fan Cycle Controls,
Individual Fuses and Contactors

MODEL 431
No Fan Cycle Controls,
Fuses and Contactors per Pair of Fans

MODEL 461
No Fan Cycle Controls,
Individual Fuses (Use with VSpeed MXK)

MODEL 315
Individual Fuses and Contactors,
Plus Fan Cycling,
Winter Isolation Solenoid Valve(s)

MODEL 335
Fuses and Contactors per Pair of Fans,
Plus Fan Cycle Controls,
Winter Isolation Solenoid Valve(s)

MODEL 415
Individual Fuses and Contactors,
Winter Isolation Solenoid Valve(s)

MODEL 435
Fuses and Contactors per Pair of Fans,
Winter Isolation Solenoid Valve(s)

MODEL 444 (Standard)
Motors Wired to Terminal Blocks

MODEL 445
Motors Wired to Terminal Blocks,
Plus Winter Isolation Solenoid Valve(s)

MODEL 465
Individual Fuses,
Winter Isolation Solenoid Valve(s)

Prices, product availability, and specifications are subject to change without notice.

MICROCHANNEL PRODUCT DESCRIPTION - AIR-COOLED CONDENSER

Version: August 2025

MX - MICROCHANNEL AIR-COOLED MODEL OPTIONS

CONDENSER WITH FACTORY MOUNTED RECEIVER:

Includes ORI / ORD Flooding Valve, Isolation Ball Valves, Gauge Type Liquid Level Indicator and Dual Relief Valve.

MICROCHANNEL	MODEL	MOUNTED RECEIVER	RECEIVER SIZE	HEAT AND INSULATION	RECEIVER INSULATION ONLY
MX * 1 RECEIVER	MX*-02	$13,110	(1) 10.75" X 60.00"	$2,130	
	MX*-04	$14,080	(1) 10.75" X 60.00"	$2,130	
	MX*-06	$15,830	(1) 12.75" X 72.00"	$2,300	
	MX*-08	$17,580	(1) 12.75" X 72.00"	$2,300	
	MX*-10	$19,460	(1) 12.75" X 72.00"	$2,480	
	MX*-12	$21,220	(1) 12.75" X 72.00"	$2,670	
	MX*-14	$22,960	(1) 12.75" X 72.00"	$2,670	

A, C, E, F or K

RECEIVER OPTIONS		
FROM RECEIVER SIZE	TO RECEIVER SIZE	UPGRADE PRICE
10.75" X 48.00"	10.75" X 60.00"	$420
10.75" X 60.00"	12.75" X 72.00"	$780
12.75" X 72.00"	14.75" X 96.00"	$1,250
10.75" X 60.00"	14.75" X 96.00"	$2,010
Add to receiver and base frame list price above.		
		DEDUCT $
10.75" X 60.00"	10.75" X 48.00"	($400)
12.75" X 72.00"	10.75" X 60.00"	($740)
12.75" X 72.00"	10.75" X 48.00"	($1,140)
Deduct from Receiver and Base Frame List Price Above.		

RECEIVER CAPACITIES: 80% FULL (LB)			
RECEIVER SIZE	R-404A	R-407 (A / F)	R-448A / R-449A
10.75" X 48.00"	114	126	121
10.75" X 60.00"	144	159	153
12.75" X 72.00"	245	270	260
14.75" X 96.00"	395	435	419

14.75" X 96.00" Heat and Insulation ****	$4,410
Drop Leg Transducer Tap with Pressure Transducer	$1,610
Drop Leg Pressure Transducer Tap ONLY	$330
Rochester Liquid Level Gauge with Alarm Contact	$2,940
Rupture Disc Assembly	$1,280

MODEL	ELECTROFIN COATED COIL	**MODULE ISOLATION BALL VALVES	***CLEANABLE COIL FILTER P/N E410114001	42" LEGS
MX*-02	$3,470	$1,470	$3,650	$200
MX*-04	$6,930	$2,940	$7,300	$200
MX*-06	$10,400	$4,410	$10,950	$200
MX*-08	$13,860	$5,880	$14,600	$400
MX*-10	$17,330	$7,350	$18,250	$400
MX*-12	$20,790	$8,820	$21,900	$400
MX*-14	$24,260	$10,290	$25,550	$500

*** Isolation ball valves per module. Isolates the entire module.*

**** Cleanable air filter per module in a "V" shape.*

***** Use the upsized Heating and Insulation pricing if the receiver is also upsized.*

MICROCHANNEL WITH A FACTORY MOUNTED RECEIVER SHIPS WITH NO LEGS STANDARD.

Prices, product availability, and specifications are subject to change without notice.

LEVITOR II / FLUID COOLER MODEL KEY

F	A	V	F	1	2	4	08	M	A

UNIT TYPE:
F - Fluid Cooler

TUBE DIAMETER:
A - 3/8"
E - 1/2"

FAN DISCHARGE DIRECTIONS:
H - Horizontal Air Flow
V - Vertical Air Flow
X - Hinged Fan Panel; Vertical Air Flow
E - Hinged Fan Panel; Horizontal Air Flow

FAN / MOTOR COMBINATION:
A - 850 RPM, 1.0 HP, 30"
B - 1140 RPM, 0.5 HP, 24" *
C - 850 RPM, 1.5 HP, 30"
E - 575 RPM, 0.5 HP, 30"
F - 1140 RPM, 1.5 HP, 30"
K - 1140 RPM, 1.5 HP, 30", BPM Motor with Drive *****

FANS WIDE:
1, 2

FIN MATERIAL:
A - Aluminum Fins
V - Vinyl Coated Fins
C - Copper Fins

VOLTAGE:
A - 230/1/60 *
K - 208/230/3/60 **
L - 380/3/60 ***
M - 460/3/60 **
P - 575/3/60 ****
U - 380/3/50 **

FIN SPACING:
08 - 8 FPI
10 - 10 FPI
12 - 12 FPI

ROWS DEEP:
2, 3, 4

FANS IN LINE:
1, 2, 3, 4, 5, 6, 7

** FAVB only.*
*** Inverter suitable motor.*
**** Contact Application Engineering for quoting.*
***** Inverter suitable motor on F and A models.*
****** BPM motors are 208-230/3/60 or 460/3/60 only. Gravity dampers should not be used with K motor applications.*

Prices, product availability, and specifications are subject to change without notice.

LEVITOR II FLUID COOLER MODELS

FAVB - 0.5 HP, 1140 RPM, 24" FAN

ONE FAN WIDE MODELS	LIST PRICE	INTERNAL VOLUME (GAL)	DIMENSIONS (IN) L	W	H*	SHIP WGT (LB)
FAVB 11208	$6,050	1.2	45.22	44.55	41.44	178
FAVB 11210	$6,200	1.2	45.22	44.55	41.44	181
FAVB 11212	$6,470	1.2	45.22	44.55	41.44	184
FAVB 11308	$6,360	1.8	45.22	44.55	41.44	180
FAVB 11310	$6,530	1.8	45.22	44.55	41.44	185
FAVB 11312	$6,800	1.8	45.22	44.55	41.44	190
FAVB 11408	$6,690	2.3	45.22	44.55	41.44	193
FAVB 11410	$6,860	2.3	45.22	44.55	41.44	200
FAVB 11412	$7,160	2.3	45.22	44.55	41.44	207
FAVB 12208	$8,000	2.2	81.22	44.55	41.44	346
FAVB 12210	$8,220	2.2	81.22	44.55	41.44	352
FAVB 12212	$8,580	2.2	81.22	44.55	41.44	358
FAVB 12308	$9,480	3.2	81.22	44.55	41.44	362
FAVB 12310	$9,740	3.2	81.22	44.55	41.44	372
FAVB 12312	$10,170	3.2	81.22	44.55	41.44	382
FAVB 12408	$10,550	5.5	81.22	44.55	41.44	386
FAVB 12410	$10,840	5.5	81.22	44.55	41.44	400
FAVB 12412	$11,330	5.5	81.22	44.55	41.44	413
FAVB 13308	$11,300	4.7	117.22	44.55	41.44	544
FAVB 13310	$11,620	4.7	117.22	44.55	41.44	559
FAVB 13312	$12,140	4.7	117.22	44.55	41.44	574
FAVB 13408	$13,930	6.2	117.22	44.55	41.44	580
FAVB 13410	$14,320	6.2	117.22	44.55	41.44	600
FAVB 13412	$14,990	6.2	117.22	44.55	41.44	620
FAVB 14308	$15,890	6.2	153.22	44.55	41.44	820
FAVB 14310	$16,350	6.2	153.22	44.55	41.44	840
FAVB 14312	$17,120	6.2	153.22	44.55	41.44	860
FAVB 14408	$16,220	8.1	153.22	44.55	41.44	873
FAVB 14410	$16,680	8.1	153.22	44.55	41.44	900
FAVB 14412	$17,470	8.1	153.22	44.55	41.44	927
FAVB 15308	$19,010	7.6	189.22	44.55	41.44	836
FAVB 15310	$19,570	7.6	189.22	44.55	41.44	861
FAVB 15312	$20,490	7.6	189.22	44.55	41.44	886
FAVB 15408	$21,140	10.1	189.22	44.55	41.44	917
FAVB 15410	$21,760	10.1	189.22	44.55	41.44	950
FAVB 15412	$22,790	10.1	189.22	44.55	41.44	983
FAVB 16308	$21,230	9.1	225.22	44.55	41.44	1,040
FAVB 16310	$21,850	9.1	225.22	44.55	41.44	1,070
FAVB 16312	$22,890	9.1	225.22	44.55	41.44	1,100
FAVB 16408	$24,430	12.0	225.22	44.55	41.44	1,110
FAVB 16410	$25,150	12.0	225.22	44.55	41.44	1,150
FAVB 16412	$26,360	12.0	225.22	44.55	41.44	1,190
FAVB 17308	$25,410	10.6	261.22	44.55	41.44	1,314
FAVB 17310	$26,160	10.6	261.22	44.55	41.44	1,349
FAVB 17312	$27,400	10.6	261.22	44.55	41.44	1,384
FAVB 17408	$29,710	14.0	261.22	44.55	41.44	1,404
FAVB 17410	$30,580	14.0	261.22	44.55	41.44	1,450
FAVB 17412	$32,060	14.0	261.22	44.55	41.44	1,497

TWO FAN WIDE MODELS	LIST PRICE	INTERNAL VOLUME (GAL)	DIMENSIONS (IN) L	W	H **	SHIP WGT (LB)
-	-	-	-	-	-	-
-	-	-	-	-	-	-
-	-	-	-	-	-	-
-	-	-	-	-	-	-
-	-	-	-	-	-	-
-	-	-	-	-	-	-
-	-	-	-	-	-	-
-	-	-	-	-	-	-
-	-	-	-	-	-	-
FAVB 22208	$14,840	4.2	81.22	87.62	41.44	642
FAVB 22210	$15,260	4.2	81.22	87.62	41.44	654
FAVB 22212	$15,970	4.2	81.22	87.62	41.44	666
FAVB 22308	$17,780	6.3	81.22	87.62	41.44	845
FAVB 22310	$18,290	6.3	81.22	87.62	41.44	865
FAVB 22312	$19,150	6.3	81.22	87.62	41.44	885
FAVB 22408	$19,900	8.4	81.22	87.62	41.44	895
FAVB 22410	$20,470	8.4	81.22	87.62	41.44	923
FAVB 22412	$21,450	8.4	81.22	87.62	41.44	953
FAVB 23308	$21,380	9.2	117.22	87.62	41.44	1,088
FAVB 23310	$22,010	9.2	117.22	87.62	41.44	1,118
FAVB 23312	$23,050	9.2	117.22	87.62	41.44	1,148
FAVB 23408	$26,600	12.3	117.22	87.62	41.44	1,185
FAVB 23410	$27,380	12.3	117.22	87.62	41.44	1,225
FAVB 23412	$28,720	12.3	117.22	87.62	41.44	1,265
FAVB 24308	$30,530	12.1	153.22	87.62	41.44	1,665
FAVB 24310	$31,430	12.1	153.22	87.62	41.44	1,705
FAVB 24312	$32,970	12.1	153.22	87.62	41.44	1,745
FAVB 24408	$31,170	16.1	153.22	87.62	41.44	1,771
FAVB 24410	$32,110	16.1	153.22	87.62	41.44	1,825
FAVB 24412	$33,660	16.1	153.22	87.62	41.44	1,880
FAVB 25308	$36,740	15.1	189.22	87.62	41.44	1,672
FAVB 25310	$37,840	15.1	189.22	87.62	41.44	1,722
FAVB 25312	$39,670	15.1	189.22	87.62	41.44	1,772
FAVB 25408	$40,970	20.1	189.22	87.62	41.44	1,859
FAVB 25410	$42,210	20.1	189.22	87.62	41.44	1,925
FAVB 25412	$44,270	20.1	189.22	87.62	41.44	1,991
FAVB 26308	$41,160	18.1	225.22	87.62	41.44	2,035
FAVB 26310	$42,390	18.1	225.22	87.62	41.44	2,095
FAVB 26312	$44,450	18.1	225.22	87.62	41.44	2,155
FAVB 26408	$47,520	24.0	225.22	87.62	41.44	2,145
FAVB 26410	$48,950	24.0	225.22	87.62	41.44	2,225
FAVB 26412	$51,350	24.0	225.22	87.62	41.44	2,305
FAVB 27308	$49,470	21.0	261.22	87.62	41.44	2,655
FAVB 27310	$50,960	21.0	261.22	87.62	41.44	2,725
FAVB 27312	$53,460	21.0	261.22	87.62	41.44	2,795
FAVB 27408	$58,010	27.9	261.22	87.62	41.44	2,835
FAVB 27410	$59,770	27.9	261.22	87.62	41.44	2,925
FAVB 27412	$62,710	27.9	261.22	87.62	41.44	3,015

** Height includes 18 inch legs.*

Prices for Horizontal and Vertical Air Flow are the same. Substitute 'H' for 'V' in the Model Number.

Prices, product availability, and specifications are subject to change without notice.

LEVITOR II FLUID COOLER MODEL OPTIONS

FAVB (0.5 HP, 1140 RPM, 24" FAN) COATING AND SPECIAL FIN OPTION PRICING

ONE FAN WIDE MODELS	ELECTROFIN COATED COIL	POLYESTER FIN COATING *	COPPER FIN
FAVB 11208	$930	$760	$1,820
FAVB 11210	$930	$780	$1,880
FAVB 11212	$930	$800	$1,930
FAVB 11308	$1,040	$830	$1,920
FAVB 11310	$1,040	$860	$1,980
FAVB 11312	$1,040	$880	$2,050
FAVB 11408	$1,070	$870	$2,060
FAVB 11410	$1,070	$890	$2,120
FAVB 11412	$1,070	$920	$2,170
FAVB 12208	$1,280	$1,040	$2,550
FAVB 12210	$1,280	$1,070	$2,630
FAVB 12212	$1,280	$1,110	$2,710
FAVB 12308	$1,560	$1,260	$3,070
FAVB 12310	$1,560	$1,300	$3,170
FAVB 12312	$1,560	$1,340	$3,260
FAVB 12408	$1,760	$1,430	$3,470
FAVB 12410	$1,760	$1,470	$3,570
FAVB 12412	$1,760	$1,520	$3,680
FAVB 13308	$1,910	$1,550	$3,760
FAVB 13310	$1,910	$1,600	$3,860
FAVB 13312	$1,910	$1,640	$3,980
FAVB 13408	$2,390	$1,930	$4,700
FAVB 13410	$2,390	$2,000	$4,850
FAVB 13412	$2,390	$2,060	$5,000
FAVB 14308	$2,860	$2,230	$5,420
FAVB 14310	$2,860	$2,290	$5,580
FAVB 14312	$2,860	$2,360	$5,750
FAVB 14408	$2,800	$2,270	$5,550
FAVB 14410	$2,800	$2,340	$5,720
FAVB 14412	$2,800	$2,400	$5,900
FAVB 15308	$3,340	$2,700	$6,570
FAVB 15310	$3,340	$2,780	$6,770
FAVB 15312	$3,340	$2,860	$6,970
FAVB 15408	$3,740	$3,010	$7,350
FAVB 15410	$3,740	$3,110	$7,570
FAVB 15412	$3,740	$3,200	$7,800
FAVB 16308	$3,750	$3,020	$7,380
FAVB 16310	$3,750	$3,120	$7,610
FAVB 16312	$3,750	$3,210	$7,830
FAVB 16408	$4,340	$3,510	$8,560
FAVB 16410	$4,340	$3,610	$8,820
FAVB 16412	$4,340	$3,730	$9,090
FAVB 17308	$4,540	$3,660	$8,900
FAVB 17310	$4,540	$3,780	$9,180
FAVB 17312	$4,540	$3,900	$9,450
FAVB 17408	$5,320	$4,310	$10,500
FAVB 17410	$5,320	$4,430	$10,820
FAVB 17412	$5,320	$4,570	$11,140

TWO FAN WIDE MODELS	ELECTROFIN COATED COIL	POLYESTER FIN COATING *	COPPER FIN
-	-	-	-
-	-	-	-
-	-	-	-
-	-	-	-
-	-	-	-
-	-	-	
-	-	-	-
-	-	-	-
-	-	-	-
FAVB 22208	$2,580	$2,090	$5,030
FAVB 22210	$2,580	$2,150	$5,190
FAVB 22212	$2,580	$2,220	$5,340
FAVB 22308	$3,120	$2,520	$6,120
FAVB 22310	$3,120	$2,600	$6,310
FAVB 22312	$3,120	$2,680	$6,500
FAVB 22408	$3,530	$2,850	$6,900
FAVB 22410	$3,530	$2,940	$7,110
FAVB 22412	$3,530	$3,020	$7,330
FAVB 23308	$3,820	$3,090	$7,430
FAVB 23310	$3,820	$3,190	$7,670
FAVB 23312	$3,820	$3,280	$7,900
FAVB 23408	$4,800	$3,890	$9,360
FAVB 23410	$4,800	$4,000	$9,640
FAVB 23412	$4,800	$4,130	$9,930
FAVB 24308	$5,500	$4,450	$10,780
FAVB 24310	$5,500	$4,590	$11,120
FAVB 24312	$5,500	$4,740	$11,460
FAVB 24408	$5,610	$4,540	$11,030
FAVB 24410	$5,610	$4,670	$11,360
FAVB 24412	$5,610	$4,820	$11,710
FAVB 25308	$6,670	$5,400	$13,060
FAVB 25310	$6,670	$5,550	$13,460
FAVB 25312	$6,670	$5,730	$13,870
FAVB 25408	$7,460	$6,040	$14,620
FAVB 25410	$7,460	$6,220	$15,070
FAVB 25412	$7,460	$6,410	$15,520
FAVB 26308	$7,490	$6,060	$14,670
FAVB 26310	$7,490	$6,240	$15,120
FAVB 26312	$7,490	$6,430	$15,580
FAVB 26408	$8,670	$7,010	$17,010
FAVB 26410	$8,670	$7,220	$17,520
FAVB 26412	$8,670	$7,440	$18,060
FAVB 27308	$9,050	$7,330	$17,720
FAVB 27310	$9,050	$7,550	$18,280
FAVB 27312	$9,050	$7,780	$18,830
FAVB 27408	$10,630	$8,590	$20,850
FAVB 27410	$10,630	$8,850	$21,500
FAVB 27412	$10,630	$9,140	$22,140

** Polyester fin coating is a vinyl coated fin material*

Prices for Horizontal and Vertical Air Flow are the same.

Prices, product availability, and specifications are subject to change without notice.

LEVITOR II FLUID COOLER MODELS

FEVA, FEVC, FEVE, FEVF - *Except FEVB*

ONE FAN WIDE MODELS	LIST PRICE	DIMENSIONS (IN) L	W	H **	SHIP WGT (LB)	TWO FAN WIDE MODELS	LIST PRICE	DIMENSIONS (IN) L	W	H **	SHIP WGT (LB)
FEV* 11208	$8,010	63.85	45.25	54.00	437	-	-	-	-	-	-
FEV* 11210	$8,100	63.85	45.25	54.00	439	-	-	-	-	-	-
FEV* 11212	$8,190	63.85	45.25	54.00	444	-	-	-	-	-	-
FEV* 11308	$8,590	63.85	45.25	54.00	466	-	-	-	-	-	-
FEV* 11310	$8,660	63.85	45.25	54.00	469	-	-	-	-	-	-
FEV* 11312	$8,770	63.85	45.25	54.00	478	-	-	-	-	-	-
FEV* 11408	$8,840	63.85	45.25	54.00	495	-	-	-	-	-	-
FEV* 11410	$8,920	63.85	45.25	54.00	499	-	-	-	-	-	-
FEV* 11412	$9,030	63.85	45.25	54.00	508	-	-	-	-	-	-
FEV* 12208	$10,940	117.85	45.25	58.50	718	FEV* 22208	$20,670	117.85	90.50	58.50	1,311
FEV* 12210	$11,120	117.85	45.25	58.50	721	FEV* 22210	$21,010	117.85	90.50	58.50	1,320
FEV* 12212	$11,290	117.85	45.25	58.50	729	FEV* 22212	$21,350	117.85	90.50	58.50	1,336
FEV* 12308	$11,630	117.85	45.25	58.50	773	FEV* 22308	$22,040	117.85	90.50	58.50	1,437
FEV* 12310	$11,840	117.85	45.25	58.50	779	FEV* 22310	$22,480	117.85	90.50	58.50	1,425
FEV* 12312	$12,270	117.85	45.25	58.50	792	FEV* 22312	$23,310	117.85	90.50	58.50	1,462
FEV* 12408	$14,260	117.85	45.25	58.50	830	FEV* 22408	$27,260	117.85	90.50	58.50	1,539
FEV* 12410	$14,790	117.85	45.25	58.50	838	FEV* 22410	$28,340	117.85	90.50	58.50	1,555
FEV* 12412	$15,340	117.85	45.25	58.50	855	FEV* 22412	$29,420	117.85	90.50	58.50	1,588
FEV* 13210	$16,100	171.85	45.25	58.50	1,041	FEV* 23210	$30,950	171.85	90.50	58.50	1,875
FEV* 13212	$16,450	171.85	45.25	58.50	1,060	FEV* 23212	$31,660	171.85	90.50	58.50	1,912
FEV* 13308	$16,810	171.85	45.25	58.50	1,126	FEV* 23308	$32,340	171.85	90.50	58.50	2,044
FEV* 13310	$17,140	171.85	45.25	58.50	1,135	FEV* 23310	$33,000	171.85	90.50	58.50	2,063
FEV* 13312	$17,700	171.85	45.25	58.50	1,153	FEV* 23312	$34,110	171.85	90.50	58.50	2,100
FEV* 13408	$19,780	171.85	45.25	58.50	1,210	FEV* 23408	$38,820	171.85	90.50	58.50	2,214
FEV* 13410	$20,550	171.85	45.25	58.50	1,223	FEV* 23410	$39,780	171.85	90.50	58.50	2,238
FEV* 13412	$21,320	171.85	45.25	58.50	1,247	FEV* 23412	$41,340	171.85	90.50	58.50	2,287
FEV* 14308	$22,140	225.85	45.25	58.50	1,437	FEV* 24308	$42,960	225.85	90.50	58.50	2,526
FEV* 14310	$22,340	225.85	45.25	58.50	1,449	FEV* 24310	$43,350	225.85	90.50	58.50	2,651
FEV* 14312	$23,160	225.85	45.25	58.50	1,474	FEV* 24312	$45,000	225.85	90.50	58.50	2,700
FEV* 14408	$26,020	225.85	45.25	58.50	1,550	FEV* 24408	$50,690	225.85	90.50	58.50	2,851
FEV* 14410	$26,650	225.85	45.25	58.50	1,566	FEV* 24410	$51,920	225.85	90.50	58.50	2,884
FEV* 14412	$28,010	225.85	45.25	58.50	1,599	FEV* 24412	$54,630	225.85	90.50	58.50	2,950
FEV* 15308	$31,010	279.85	45.25	58.50	2,020	FEV* 25308	$60,570	279.85	90.50	64.00	3,725
FEV* 15310	$31,430	279.85	45.25	58.50	2,035	FEV* 25310	$61,440	279.85	90.50	64.00	3,755
FEV* 15312	$31,870	279.85	45.25	58.50	2,066	FEV* 25312	$62,280	279.85	90.50	64.00	3,817
FEV* 15408	$32,250	279.85	45.25	58.50	2,160	FEV* 25408	$63,120	279.85	90.50	64.00	4,005
FEV* 15410	$33,580	279.85	45.25	58.50	2,181	FEV* 25410	$65,730	279.85	90.50	64.00	4,046
FEV* 15412	$34,900	279.85	45.25	58.50	2,222	FEV* 25412	$68,340	279.85	90.50	64.00	4,129
FEV* 16308	$35,530	333.85	45.25	58.50	2,554	FEV* 26308	$69,610	333.85	90.50	64.00	4,759
FEV* 16310	$36,030	333.85	45.25	58.50	2,573	FEV* 26310	$70,610	333.85	90.50	64.00	4,796
FEV* 16312	$36,550	333.85	45.25	58.50	2,610	FEV* 26312	$71,620	333.85	90.50	64.00	4,870
FEV* 16408	$37,050	333.85	45.25	58.50	2,784	FEV* 26408	$72,650	333.85	90.50	64.00	5,218
FEV* 16410	$37,580	333.85	45.25	58.50	2,808	FEV* 26410	$73,660	333.85	90.50	64.00	5,268
FEV* 16412	$38,060	333.85	45.25	58.50	2,858	FEV* 26412	$74,650	333.85	90.50	64.00	5,366
FEV* 17308	$42,090	387.85	45.25	58.50	3,020	FEV* 27308	$81,550	387.85	90.50	64.00	5,691
FEV* 17310	$42,690	387.85	45.25	58.50	3,042	FEV* 27310	$82,720	387.85	90.50	64.00	5,734
FEV* 17312	$43,270	387.85	45.25	58.50	3,088	FEV* 27312	$85,080	387.85	90.50	64.00	5,826
FEV* 17408	$43,860	387.85	45.25	58.50	3,279	FEV* 27408	$86,230	387.85	90.50	64.00	6,208
FEV* 17410	$44,470	387.85	45.25	58.50	3,307	FEV* 27410	$87,440	387.85	90.50	64.00	6,266
FEV* 17412	$45,070	387.85	45.25	58.50	3,366	FEV* 27412	$88,670	387.85	90.50	64.00	6,382

** A,C,E,F to specify fans as:*

A = 1.0 HP, 850 RPM
C = 1.5 HP, 850 RPM
E = 0.5 HP, 575 RPM
F = 1.5 HP, 1140 RPM

*** Height includes 22 inch legs.*

Prices, product availability, and specifications are subject to change without notice.

LEVITOR II FLUID COOLER MODELS

FEVK - 1.5 HP 1140 RPM BPM MOTOR and PANEL MOUNTED DRIVE

ONE FAN WIDE MODELS	LIST PRICE	DIMENSIONS (IN) L	W	H *	SHIP WGT (LB)	TWO FAN WIDE MODELS	LIST PRICE	DIMENSIONS (IN) L	W	H *	SHIP WGT (LB)
FEVK 11208	$11,690	66.75	45.25	58.50	437	-	-	-	-	-	-
FEVK 11210	$11,780	66.75	45.25	58.50	439	-	-	-	-	-	-
FEVK 11212	$11,870	66.75	45.25	58.50	444	-	-	-	-	-	-
FEVK 11308	$12,280	66.75	45.25	58.50	466	-	-	-	-	-	-
FEVK 11310	$12,340	66.75	45.25	58.50	469	-	-	-	-	-	-
FEVK 11312	$12,450	66.75	45.25	58.50	478	-	-	-	-	-	-
FEVK 11408	$12,530	66.75	45.25	58.50	495	-	-	-	-	-	-
FEVK 11410	$12,600	66.75	45.25	58.50	499	-	-	-	-	-	-
FEVK 11412	$12,720	66.75	45.25	58.50	508	-	-	-	-	-	-
FEVK 12208	$16,510	120.75	45.25	63.00	718	FEVK 22208	$30,160	120.75	90.50	63.00	1,311
FEVK 12210	$16,690	120.75	45.25	63.00	721	FEVK 22210	$30,510	120.75	90.50	63.00	1,320
FEVK 12212	$16,860	120.75	45.25	63.00	729	FEVK 22212	$30,860	120.75	90.50	63.00	1,336
FEVK 12308	$17,200	120.75	45.25	63.00	773	FEVK 22308	$31,530	120.75	90.50	63.00	1,437
FEVK 12310	$17,410	120.75	45.25	63.00	779	FEVK 22310	$31,980	120.75	90.50	63.00	1,425
FEVK 12312	$17,840	120.75	45.25	63.00	792	FEVK 22312	$32,810	120.75	90.50	63.00	1,462
FEVK 12408	$19,830	120.75	45.25	63.00	830	FEVK 22408	$36,750	120.75	90.50	63.00	1,539
FEVK 12410	$20,360	120.75	45.25	63.00	838	FEVK 22410	$37,830	120.75	90.50	63.00	1,555
FEVK 12412	$20,910	120.75	45.25	63.00	855	FEVK 22412	$38,910	120.75	90.50	63.00	1,588
FEVK 13210	$23,600	174.75	45.25	63.00	1,041	FEVK 23210	$45,010	174.75	90.50	63.00	1,875
FEVK 13212	$23,940	174.75	45.25	63.00	1,060	FEVK 23212	$45,700	174.75	90.50	63.00	1,912
FEVK 13308	$24,290	174.75	45.25	63.00	1,126	FEVK 23308	$46,390	174.75	90.50	63.00	2,044
FEVK 13310	$24,630	174.75	45.25	63.00	1,135	FEVK 23310	$47,040	174.75	90.50	63.00	2,063
FEVK 13312	$25,180	174.75	45.25	63.00	1,153	FEVK 23312	$48,160	174.75	90.50	63.00	2,100
FEVK 13408	$27,270	174.75	45.25	63.00	1,210	FEVK 23408	$52,870	174.75	90.50	63.00	2,214
FEVK 13410	$28,040	174.75	45.25	63.00	1,223	FEVK 23410	$53,830	174.75	90.50	63.00	2,238
FEVK 13412	$28,810	174.75	45.25	63.00	1,247	FEVK 23412	$55,390	174.75	90.50	63.00	2,287
FEVK 14308	$31,910	228.75	45.25	63.00	1,437	FEVK 24308	$60,760	228.75	90.50	63.00	2,526
FEVK 14310	$32,100	228.75	45.25	63.00	1,449	FEVK 24310	$61,150	228.75	90.50	63.00	2,651
FEVK 14312	$32,920	228.75	45.25	63.00	1,474	FEVK 24312	$62,800	228.75	90.50	63.00	2,700
FEVK 14408	$35,790	228.75	45.25	63.00	1,550	FEVK 24408	$68,480	228.75	90.50	63.00	2,851
FEVK 14410	$36,410	228.75	45.25	63.00	1,566	FEVK 24410	$69,720	228.75	90.50	63.00	2,884
FEVK 14412	$37,770	228.75	45.25	63.00	1,599	FEVK 24412	$72,430	228.75	90.50	63.00	2,950
FEVK 15308	$43,590	274.00	56.00	63.00	2,020	FEVK 25308	$82,150	274.00	90.50	63.00	3,725
FEVK 15310	$44,020	274.00	56.00	63.00	2,035	FEVK 25310	$83,020	274.00	90.50	63.00	3,755
FEVK 15312	$44,440	274.00	56.00	63.00	2,066	FEVK 25312	$83,860	274.00	90.50	63.00	3,817
FEVK 15408	$44,840	274.00	56.00	63.00	2,160	FEVK 25408	$84,700	274.00	90.50	63.00	4,005
FEVK 15410	$46,160	274.00	56.00	63.00	2,181	FEVK 25410	$87,310	274.00	90.50	63.00	4,046
FEVK 15412	$47,480	274.00	56.00	63.00	2,222	FEVK 25412	$89,920	274.00	90.50	63.00	4,129
FEVK 16308	$50,330	328.00	56.00	63.00	2,554	FEVK 26308	$95,210	328.00	90.50	63.00	4,759
FEVK 16310	$50,820	328.00	56.00	63.00	2,573	FEVK 26310	$96,210	328.00	90.50	63.00	4,796
FEVK 16312	$51,330	328.00	56.00	63.00	2,610	FEVK 26312	$97,230	328.00	90.50	63.00	4,870
FEVK 16408	$51,840	328.00	56.00	63.00	2,784	FEVK 26408	$98,260	328.00	90.50	63.00	5,218
FEVK 16410	$52,360	328.00	56.00	63.00	2,808	FEVK 26410	$99,250	328.00	90.50	63.00	5,268
FEVK 16412	$52,860	328.00	56.00	63.00	2,858	FEVK 26412	$100,260	328.00	90.50	63.00	5,366
FEVK 17308	$58,860	382.00	56.00	63.00	3,020	FEVK 27308	$110,690	382.00	90.50	63.00	5,757
FEVK 17310	$59,470	382.00	56.00	63.00	3,042	FEVK 27310	$111,860	382.00	90.50	63.00	5,794
FEVK 17312	$60,040	382.00	56.00	63.00	3,088	FEVK 27312	$114,210	382.00	90.50	63.00	5,868
FEVK 17408	$60,620	382.00	56.00	63.00	3,279	FEVK 27408	$115,380	382.00	90.50	63.00	6,216
FEVK 17410	$61,230	382.00	56.00	63.00	3,307	FEVK 27410	$116,580	382.00	90.50	63.00	6,266
FEVK 17412	$61,840	382.00	56.00	63.00	3,366	FEVK 27412	$117,810	382.00	90.50	63.00	6,364

** Height includes 22 inch legs.*

Gravity dampers should not be used with K motor applications.

Prices, product availability, and specifications are subject to change without notice.

LEVITOR II FLUID COOLER MODEL OPTIONS

FEV - COIL COATING and SPECIAL FIN OPTION PRICING FOR ALL MODELS (A, C, E, F, or K) - *Except FEVB*

ONE FAN WIDE MODELS	INTERNAL VOLUME (GAL)	DIMENSIONS (IN) L	W	H	SHIP WGT (LB)	ELECTROFIN COATED COIL	POLYESTER FIN COATING**	COPPER FIN
FEV*11208	3.7	63.85	45.25	54.00	437	$1,250	$1,030	$2,770
FEV*11210	3.7	63.85	45.25	54.00	439	$1,250	$1,040	$2,760
FEV*11212	3.7	63.85	45.25	54.00	444	$1,250	$1,050	$2,760
FEV*11308	5.3	63.85	45.25	54.00	466	$1,370	$1,110	$2,910
FEV*11310	5.3	63.85	45.25	54.00	469	$1,370	$1,130	$2,970
FEV*11312	5.3	63.85	45.25	54.00	478	$1,370	$1,160	$3,050
FEV*11408	6.9	63.85	45.25	54.00	495	$1,420	$1,170	$3,080
FEV*11410	6.9	63.85	45.25	54.00	499	$1,420	$1,180	$3,110
FEV*11412	6.9	63.85	45.25	54.00	508	$1,420	$1,190	$3,150
FEV*12208	6.6	117.85	45.25	58.50	718	$1,790	$1,460	$3,900
FEV*12210	6.6	117.85	45.25	58.50	721	$1,790	$1,480	$3,960
FEV*12212	6.6	117.85	45.25	58.50	729	$1,790	$1,510	$4,000
FEV*12308	9.7	117.85	45.25	58.50	773	$1,910	$1,580	$4,190
FEV*12310	9.7	117.85	45.25	58.50	779	$1,910	$1,600	$4,240
FEV*12312	9.7	117.85	45.25	58.50	792	$1,910	$1,650	$4,370
FEV*12408	12.8	117.85	45.25	58.50	830	$2,440	$1,930	$5,200
FEV*12410	12.8	117.85	45.25	58.50	838	$2,440	$2,030	$5,360
FEV*12412	12.8	117.85	45.25	58.50	855	$2,440	$2,120	$5,640
FEV*13210	9.6	171.85	45.25	58.50	1,041	$2,680	$2,230	$5,950
FEV*13212	9.6	171.85	45.25	58.50	1,060	$2,680	$2,270	$6,020
FEV*13308	14.1	171.85	45.25	58.50	1,126	$2,850	$2,310	$6,150
FEV*13310	14.1	171.85	45.25	58.50	1,135	$2,850	$2,370	$6,310
FEV*13312	14.1	171.85	45.25	58.50	1,153	$2,850	$2,460	$6,520
FEV*13408	18.7	171.85	45.25	58.50	1,210	$3,440	$2,770	$7,370
FEV*13410	18.7	171.85	45.25	58.50	1,223	$3,440	$2,880	$7,650
FEV*13412	18.7	171.85	45.25	58.50	1,247	$3,440	$2,980	$7,960
FEV*14308	18.6	225.85	45.25	58.50	1,437	$3,760	$3,110	$8,260
FEV*14310	18.6	225.85	45.25	58.50	1,449	$3,760	$3,130	$8,310
FEV*14312	18.6	225.85	45.25	58.50	1,474	$3,760	$3,260	$8,700
FEV*14408	24.6	225.85	45.25	58.50	1,550	$4,540	$3,660	$9,770
FEV*14410	24.6	225.85	45.25	58.50	1,566	$4,540	$3,780	$10,020
FEV*14412	24.6	225.85	45.25	58.50	1,599	$4,540	$3,980	$10,610
FEV*15308	22.9	279.85	45.25	58.50	2,020	$5,380	$4,420	$11,730
FEV*15310	22.9	279.85	45.25	58.50	2,035	$5,380	$4,470	$11,880
FEV*15312	22.9	279.85	45.25	58.50	2,066	$5,380	$4,550	$12,120
FEV*15408	30.5	279.85	45.25	58.50	2,160	$5,750	$4,600	$12,260
FEV*15410	30.5	279.85	45.25	58.50	2,181	$5,750	$4,800	$12,780
FEV*15412	30.5	279.85	45.25	58.50	2,222	$5,750	$4,980	$13,260
FEV*16308	27.4	333.85	45.25	58.50	2,554	$6,300	$5,180	$13,790
FEV*16310	27.4	333.85	45.25	58.50	2,573	$6,300	$5,250	$13,950
FEV*16312	27.4	333.85	45.25	58.50	2,610	$6,300	$5,340	$14,230
FEV*16408	36.4	333.85	45.25	58.50	2,784	$6,590	$5,410	$14,400
FEV*16410	36.4	333.85	45.25	58.50	2,808	$6,590	$5,490	$14,580
FEV*16412	36.4	333.85	45.25	58.50	2,858	$6,590	$5,540	$14,750
FEV*17308	31.9	387.85	45.25	58.50	3,020	$35,340	$6,000	$16,040
FEV*17310	31.9	387.85	45.25	58.50	3,042	$35,340	$6,030	$16,030
FEV*17312	31.9	387.85	45.25	58.50	3,088	$35,340	$6,130	$16,300
FEV*17408	42.3	387.85	45.25	58.50	3,279	$41,450	$6,130	$16,330
FEV*17410	42.3	387.85	45.25	58.50	3,307	$41,450	$6,200	$16,430
FEV*17412	42.3	387.85	45.25	58.50	3,366	$41,450	$6,240	$16,570

TWO FAN WIDE MODELS	INTERNAL VOLUME (GAL)	DIMENSIONS (IN) L	W	H	SHIP WGT (LB)	ELECTROFIN COATED COIL	POLYESTER FIN COATING**	COPPER FIN
-	-	-	-	-	-	-	-	-
-	-	-	-	-	-	-	-	-
-	-	-	-	-	-	-	-	-
-	-	-	-	-	-	-	-	-
-	-	-	-	-	-	-	-	-
-	-	-	-	-	-	-	-	-
-	-	-	-	-	-	-	-	-
-	-	-	-	-	-	-	-	-
-	-	-	-	-	-	-	-	-
FEV*22208	12.8	117.85	90.50	58.50	1,311	$3,540	$2,910	$7,750
FEV*22210	12.8	117.85	90.50	58.50	1,320	$3,540	$2,950	$7,850
FEV*22212	12.8	117.85	90.50	58.50	1,336	$3,540	$2,980	$7,990
FEV*22308	19.1	117.85	90.50	58.50	1,425	$3,800	$3,100	$8,330
FEV*22310	19.1	117.85	90.50	58.50	1,437	$3,800	$3,170	$8,440
FEV*22312	19.1	117.85	90.50	58.50	1,462	$3,800	$3,300	$8,680
FEV*22408	25.3	117.85	90.50	58.50	1,539	$4,820	$3,860	$10,320
FEV*22410	25.3	117.85	90.50	58.50	1,555	$4,820	$4,020	$10,650
FEV*22412	25.3	117.85	90.50	58.50	1,588	$4,820	$4,180	$11,190
FEV*23210	18.7	171.85	90.50	58.50	1,875	$5,290	$4,410	$11,790
FEV*23212	18.7	171.85	90.50	58.50	1,912	$5,290	$4,520	$11,990
FEV*23308	27.9	171.85	90.50	58.50	2,044	$5,650	$4,610	$12,200
FEV*23310	27.9	171.85	90.50	58.50	2,063	$5,650	$4,700	$12,550
FEV*23312	27.9	171.85	90.50	58.50	2,100	$5,650	$4,870	$13,000
FEV*23408	37.1	171.85	90.50	58.50	2,214	$6,870	$5,550	$14,860
FEV*23410	37.1	171.85	90.50	58.50	2,238	$6,870	$5,720	$15,190
FEV*23412	37.1	171.85	90.50	58.50	2,287	$6,870	$5,930	$15,810
FEV*24308	36.7	225.85	90.50	58.50	2,526	$7,470	$6,180	$16,440
FEV*24310	36.7	225.85	90.50	58.50	2,651	$7,470	$6,230	$16,520
FEV*24312	36.7	225.85	90.50	58.50	2,700	$7,470	$6,480	$17,280
FEV*24408	48.8	225.85	90.50	58.50	2,851	$9,000	$7,310	$19,420
FEV*24410	48.8	225.85	90.50	58.50	2,884	$9,000	$7,500	$19,920
FEV*24412	48.8	225.85	90.50	58.50	2,950	$9,000	$7,900	$21,130
FEV*25308	45.6	279.85	90.50	64.00	3,725	$10,680	$8,770	$23,360
FEV*25310	45.6	279.85	90.50	64.00	3,755	$10,680	$8,900	$23,610
FEV*25312	45.6	279.85	90.50	64.00	3,817	$10,680	$9,120	$24,080
FEV*25408	60.7	279.85	90.50	64.00	4,005	$11,450	$9,140	$24,380
FEV*25410	60.7	279.85	90.50	64.00	4,046	$11,450	$9,530	$25,420
FEV*25412	60.7	279.85	90.50	64.00	4,129	$11,450	$9,910	$26,370
FEV*26308	54.6	333.85	90.50	64.00	4,759	$12,520	$10,300	$27,440
FEV*26310	54.6	333.85	90.50	64.00	4,796	$12,520	$10,430	$27,740
FEV*26312	54.6	333.85	90.50	64.00	4,870	$12,520	$10,590	$28,280
FEV*26408	72.5	333.85	90.50	64.00	5,218	$13,060	$10,740	$28,660
FEV*26410	72.5	333.85	90.50	64.00	5,268	$13,060	$10,890	$29,010
FEV*26412	72.5	333.85	90.50	64.00	5,366	$13,060	$11,040	$29,320
FEV*27308	63.6	387.85	90.50	64.00	5,691	$70,680	$11,820	$31,890
FEV*27310	63.6	387.85	90.50	64.00	5,734	$70,680	$11,960	$31,870
FEV*27312	63.6	387.85	90.50	64.00	5,826	$70,680	$12,120	$32,410
FEV*27408	84.3	387.85	90.50	64.00	6,208	$82,900	$12,270	$32,510
FEV*27410	84.3	387.85	90.50	64.00	6,266	$82,900	$12,410	$32,690
FEV*27412	84.3	387.85	90.50	64.00	6,382	$82,900	$12,570	$32,950

** Substitute letter.*

*** Polyester fin coating is a vinyl coated fin stock.*

Prices, product availability, and specifications are subject to change without notice.

FLUID COOLER CONTROL PANEL NOMENCLATURE

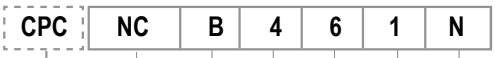

RELAY BOARD (optional)
A, B, C, E, F Motor
N - None
CPC - 8RO board
CPC1 - Multiflex 88
CPC2 - Multiflex 88AO
AKC - Danfoss 88 w/AKC-SC355/255
AKS - Danfoss 88 w/AKS-SM800
MTH - Microthermo 508
MTH1 - Microthermo 722F and 784A
NOV - Novar
K Motor
N - None
CPC2 - Multiflex 88AO
JCI - Johnson Controls (HSM CONTROLLER)
MTH1 - Microthermo 722F and 784A
DAN - Danfoss

BACKUP CONTROLLER
A, B, C, E, F Motor
NC - No Controls
FTN - Temp Fan Cycling
K Motor
KB - KB Drive
CD - Copeland Drive

CONTROL VOLTAGE
A, B, C, E, F Motor
A - 208/230 V
B - 115 V
C - No Control Voltage
D - 24 V
E - 208/230 V w/o Transformer
F - 115 V w/o Transformer
H - 24 V w/o Transformer
K Motor
A - 208/230 V
B - 115 V

AMBIENT AIR SENSOR FOR SPLIT
A, B, C, E, F Motor
T - Sensor Provided
N - Sensor Not Required
K Motor
T - Sensor Provided
N - Sensor Not Required

TYPE OF APPLICATION
A, B, C, E, F Motor
1 - Standard
3* - 50/50 Split Dual Panel (for Two Independent Slabs)
4 - No Control Operation (Terminal Blocks Only)
K Motor
1 - Standard
3* - 50/50 Split Dual Panel (for Two Independent Slabs)

FUSES AND BREAKERS
A, B, C, E, F Motor
1 - Individual Fuses and Contactors
2 - Individual Circuit Breakers and Contactors per Fan
3 - Fuses and Contactors per Pair of Fans
4 - Terminal Blocks Only
5 - Circuit Breaker and Contactor per Pair of Fans
6 - Fuses Only per Motor
8 - High SCCR, Individual Fuses and Contactors
9 - High SCCR, Fuses and Contactors per Pair of Fans
K Motor
6 - Fuses Only per Motor

BACKUP CONTROL TYPE
A, B, C, E, F Motor
3 - Johnson Electric
4 - No Controls
K Motor
4 - No Controls

---

* Applies only for 2-wide units

Prices, product availability, and specifications are subject to change without notice.

FLUID COOLER CONTROL PANEL and ELECTRICAL INFORMATION

FAN CONFIGURATION	FTN 311	FTN 331	NC 411	NC 431	NC 461
1 X 1	$1,300	-	$1,000	-	$660
1 X 2	$1,860	-	$1,260	-	$870
1 X 3	$2,380	-	$1,330	-	$880
1 X 4	$2,930	-	$1,720	-	$1,210
1 X 5	$3,440	-	$1,960	-	$1,380
1 X 6	$3,940	-	$2,170	-	$1,530
1 X 7	$4,450	-	$2,380	-	$1,670
2 X 2	$2,810	$2,000	$2,240	$1,400	$1,710
2 X 3	$3,760	$2,530	$2,880	$1,650	$2,230
2 X 4	$4,670	$3,050	$3,510	$1,890	$2,720
2 X 5	$5,580	$3,580	$4,080	$2,120	$3,170
2 X 6	$6,460	$4,080	$4,690	$2,310	$3,640
2 X 7	$7,350	$4,580	$5,280	$2,530	$4,120

FTN Above 130° F Requires High Temperature Control Adder.

FAN CONFIGURATION	FTN *381	FTN *391	NC *481	NC *491
1 X 1	$2,670		$2,370	
1 X 2	$4,340		$3,740	
1 X 3	$5,970		$4,920	
1 X 4	$7,840		$6,630	
1 X 5	$9,460		$7,980	
1 X 6	$10,970		$9,200	
1 X 7	$12,770		$10,700	
2 X 2	$7,720	$4,480	$7,150	$3,880
2 X 3	$10,790	$6,120	$9,910	$5,240
2 X 4	$14,100	$7,960	$12,940	$6,800
2 X 5	$17,460	$9,600	$15,960	$8,140
2 X 6	$20,750	$11,110	$18,980	$9,340
2 X 7	$23,860	$12,900	$21,790	$10,850

OPTIONS	ADD $
50 / 50 Split (2X Only) for Independent Slab Operation	**Two 1 x Panels**
Phase Loss Monitor — already included	$0
Circuit Breakers: Per Breaker	$450
NEMA Contactor: Per Contactor	$390
Mounted **Non-Fused** Disconnect	$1,860
Mounted **Fused** Disconnect (100 Amp or Less)	$2,070
VFD Power Distribution Block	$650
115 Volt GFI Outlet (Not Wired)	$1,070
Control Circuit 10 Amp Disconnect	$340
High Temperature Fan Cycle Control (Above 130°F)	$570
NEMA 4 Enclosure with Fan Cycling	$2,070
NEMA 4 Enclosure with Terminal Blocks	$790
NEMA 4X Enclosure 24" Fan Units	$1,300
NEMA 4X Enclosure 30" Fan Units	$3,450
Vent and Drain Valve (Each) (Requires Two for Double Wide Model)	$560
RELAY BOARDS	
CPC - 8RO Relay Board	$2,720
CPC1 - Multiflex 88 Board	$3,240
CPC2 - Multiflex 88AO Board	$3,650
AKC - Danfoss 88 Board and Comm - AK2-XM205B (TP78-Old)*	$2,720
AKS - Danfoss 88 Board and Comm - AK2-XM205B (RS485)*	$2,720
DAN - Danfoss MX06D with Transducer and Temp Sensor	$2,650
MTH - Microthermo - MT-508	$2,720
MTH1 - Microthermo - MT-722F / 784A	$4,450
NOV - Novar #7330130	$2,720
Ambient Air Sensor - CPC, Danfoss, Novar (Shipped Loose)	$350
Ambient Air Sensor - CPC, Danfoss, Novar (Mounted)	$640

CONTROL DESCRIPTION

MODEL 311
Individual Fuses and Contactors, plus Fan Cycling Control

MODEL 331
Fuses and Contactors per Pair of Fans, plus Fan Cycle Controls

MODEL 411
No Fan Cycle Controls, Individual Fuses and Contactors

MODEL 431
No Fan Cycle Controls, Fuses and Contactors per Pair of Fans

MODEL 461
No Fan Cycle Controls
Individual Fuses

NOTE:
The heading of each column is the last 3 numbers in the Control Panel Nomenclature.

*** Controller model required to provide correct com module.**

Prices, product availability, and specifications are subject to change without notice.

FLUID COOLER OPTIONS

LEG OPTIONS - 30" FAN UNITS

FAN CONFIGURATION	DEDUCT FOR NO LEGS	15" LEGS	22" LEGS	30" LEGS	36" LEGS	42" LEGS	48" LEGS	60" LEGS
1 X 1	($80)	N/C	STD	$200	$200	$200	$1,440	$2,090
1 X 2	($80)	N/C	STD	$200	$200	$200	$2,160	$3,120
1 X 3	($120)	N/C	STD	$300	$300	$300	$2,890	$4,180
1 X 4	($120)	N/C	STD	$300	$300	$300	$3,600	$5,220
1 X 5	($120)	N/C	STD	$390	$390	$390	$4,320	$6,240
1 X 6	($160)	N/C	STD	$390	$390	$390	$5,040	$7,280
1 X 7	($200)	N/C	STD	$490	$490	$490	$5,760	$8,320
2 X 2	($80)	N/C	STD	$200	$200	$200	$2,160	$3,120
2 X 3	($120)	N/C	STD	$300	$300	$300	$2,890	$4,150
2 X 4	($120)	N/C	STD	$300	$300	$300	$3,600	$5,190
2 X 5	($160)	N/C	STD	$390	$390	$390	$4,320	$6,240
2 X 6	($160)	N/C	STD	$390	$390	$390	$5,040	$7,280
2 X 7	($200)	N/C	STD	$490	$490	$490	$5,760	$8,300

FAN CONFIGURATION	HINGED FAN PANEL	GRAVITY DAMPERS	PAINTED HOUSING
1 X 1	$390	$760	$990
1 X 2	$780	$1,510	$1,970
1 X 3	$1,170	$2,280	$2,960
1 X 4	$1,550	$3,040	$3,950
1 X 5	$1,940	$3,800	$4,940
1 X 6	$2,330	$4,560	$5,920
1 X 7	$2,720	$5,320	$6,910
2 X 2	$1,550	$3,040	$3,800
2 X 3	$2,330	$4,560	$5,700
2 X 4	$3,110	$6,080	$7,600
2 X 5	$3,890	$7,600	$9,500
2 X 6	$4,660	$9,120	$11,400
2 X 7	$5,440	$10,640	$13,300

150# FLANGED CONNECTIONS	LIST PRICE
In Line Up to 2.5"	$640
In Line 3"	$710
In Line 4"	$780
Double-Wide up to 2.5"	$1,290
Double-Wide 3"	$1,420
Double-Wide 4"	$1,560

DOUBLE WIDE UNIT MANIFOLD KITS		LIST PRICE
Flow Rates: 80 to 200 GPM	3.125 ODS or 3 MPT	$3,240
Flow Rates: 201 to 320 GPM	4.125 ODS or 4 MPT	$5,010

Prices, product availability, and specifications are subject to change without notice.

EC LEVITOR II / FLUID COOLER MODEL KEY

L	A	V	H	1	2	4	08	M

UNIT TYPE:
L - Levitor Condenser
F - Fluid Cooler

TUBE DIAMETER:
A - 3/8"
E - 1/2"

FAN DISCHARGE DIRECTIONS:
H - Horizontal Air Flow
V - Vertical Air Flow

FAN / MOTOR COMBINATION:
H - 1020 RPM, 2.5 HP, 800 mm, EC

FANS WIDE:
1, 2

VOLTAGE:
K - 208/230/3/60
L - 380/3/60 *
M - 460/3/60
U - 380/3/50

FIN SPACING:
08 - 8 FPI
10 - 10 FPI
12 - 12 FPI

ROWS DEEP:
2, 3, 4

FANS IN LINE:
1, 2, 3, 4, 5, 6

EC MICROCHANNEL AIR-COOLED MODEL KEY

MX	H	-	06	M

UNIT TYPE:
MX - Microchannel Condenser

FAN / MOTOR COMBINATION:
H - 1020 RPM, 2.5 HP, 800mm EC

NUMBER OF FANS

02	08	12
04	10	14
06		

VOLTAGE:
K - 200/240/3/60
L - 380/3/60 *
M - 460/3/60
U - 380/3/50

** Contact Application Engineering for quoting.*

EC Motors are NOT available with 575 Volt option.

Prices, product availability, and specifications are subject to change without notice.

EC LEVITOR II / MICROCHANNEL PRODUCT DESCRIPTION - AIR-COOLED CONDENSER

Version: August 2025

EC LEVITOR II MODELS - LAVH

ONE FAN WIDE MODELS	LIST PRICE	DIMENSIONS (IN) L	W	H **	SHIP WGT (LB)
LAVH 11208	$12,800	58.00	45.25	65.00	494
LAVH 11210	$12,860	58.00	45.25	65.00	496
LAVH 11212	$12,950	58.00	45.25	65.00	501
LAVH 11308	$13,350	58.00	45.25	65.00	523
LAVH 11310	$13,440	58.00	45.25	65.00	526
LAVH 11312	$13,510	58.00	45.25	65.00	535
LAVH 11408	$13,620	58.00	45.25	65.00	552
LAVH 11410	$13,690	58.00	45.25	65.00	556
LAVH 11412	$13,770	58.00	45.25	65.00	565
LAVH 12208	$20,570	112.00	45.25	65.00	832
LAVH 12210	$20,750	112.00	45.25	65.00	835
LAVH 12212	$20,910	112.00	45.25	65.00	843
LAVH 12308	$21,250	112.00	45.25	65.00	887
LAVH 12310	$21,470	112.00	45.25	65.00	893
LAVH 12312	$21,880	112.00	45.25	65.00	906
LAVH 12408	$23,810	112.00	45.25	65.00	944
LAVH 12410	$24,360	112.00	45.25	65.00	952
LAVH 12412	$24,890	112.00	45.25	65.00	969
LAVH 13210	$30,540	166.00	45.25	65.00	1,212
LAVH 13212	$30,880	166.00	45.25	65.00	1,231
LAVH 13308	$31,210	166.00	45.25	65.00	1,297
LAVH 13310	$31,550	166.00	45.25	65.00	1,306
LAVH 13312	$32,100	166.00	45.25	65.00	1,324
LAVH 13408	$34,150	166.00	45.25	65.00	1,381
LAVH 13410	$34,900	166.00	45.25	65.00	1,394
LAVH 13412	$35,670	166.00	45.25	65.00	1,418
LAVH 14308	$41,380	220.00	45.25	65.00	1,665
LAVH 14310	$41,550	220.00	45.25	65.00	1,677
LAVH 14312	$42,390	220.00	45.25	65.00	1,702
LAVH 14408	$45,180	220.00	45.25	65.00	1,778
LAVH 14410	$45,800	220.00	45.25	65.00	1,794
LAVH 14412	$47,130	220.00	45.25	65.00	1,827
LAVH 15308	$54,950	274.00	45.25	69.50	2,305
LAVH 15310	$55,390	274.00	45.25	69.50	2,320
LAVH 15312	$55,790	274.00	45.25	69.50	2,351
LAVH 15408	$56,210	274.00	45.25	69.50	2,445
LAVH 15410	$57,510	274.00	45.25	69.50	2,466
LAVH 15412	$58,790	274.00	45.25	69.50	2,507
LEVH 16308	$64,940	328.00	45.25	69.50	2,896
LEVH 16310	$65,440	328.00	45.25	69.50	2,915
LEVH 16312	$65,960	328.00	45.25	69.50	2,952
LEVH 16408	$66,450	328.00	45.25	69.50	3,126
LEVH 16410	$66,980	328.00	45.25	69.50	3,150
LEVH 16412	$67,480	328.00	45.25	69.50	3,200

TWO FAN WIDE MODELS	LIST PRICE	DIMENSIONS (IN) L	W	H **	SHIP WGT (LB)
-	-	-	-	-	-
-	-	-	-	-	-
-	-	-	-	-	-
-	-	-	-	-	-
-	-	-	-	-	-
-	-	-	-	-	-
-	-	-	-	-	-
-	-	-	-	-	-
LAVH 22208	$39,920	112.00	90.50	65.00	1,539
LAVH 22210	$40,250	112.00	90.50	65.00	1,548
LAVH 22212	$40,600	112.00	90.50	65.00	1,564
LAVH 22308	$41,260	112.00	90.50	65.00	1,665
LAVH 22310	$41,700	112.00	90.50	65.00	1,653
LAVH 22312	$42,530	112.00	90.50	65.00	1,690
LAVH 22408	$46,380	112.00	90.50	65.00	1,767
LAVH 22410	$47,470	112.00	90.50	65.00	1,783
LAVH 22412	$48,520	112.00	90.50	65.00	1,816
LAVH 23210	$59,830	166.00	90.50	65.00	2,217
LAVH 23212	$60,510	166.00	90.50	65.00	2,254
LAVH 23308	$61,170	166.00	90.50	65.00	2,386
LAVH 23310	$61,810	166.00	90.50	65.00	2,405
LAVH 23312	$62,910	166.00	90.50	65.00	2,442
LAVH 23408	$67,530	166.00	90.50	65.00	2,556
LAVH 23410	$68,500	166.00	90.50	65.00	2,580
LAVH 23412	$70,000	166.00	90.50	65.00	2,629
LAVH 24308	$81,410	220.00	90.50	65.00	2,982
LAVH 24310	$81,790	220.00	90.50	65.00	3,107
LAVH 24312	$83,400	220.00	90.50	65.00	3,156
LAVH 24408	$88,990	220.00	90.50	65.00	3,307
LAVH 24410	$90,200	220.00	90.50	65.00	3,340
LAVH 24412	$92,850	220.00	90.50	65.00	3,406
LAVH 25308	$108,490	274.00	90.50	69.50	4,295
LAVH 25310	$109,360	274.00	90.50	69.50	4,325
LAVH 25312	$110,200	274.00	90.50	69.50	4,387
LAVH 25408	$111,000	274.00	90.50	69.50	4,575
LAVH 25410	$113,540	274.00	90.50	69.50	4,616
LAVH 25412	$116,120	274.00	90.50	69.50	4,699
LEVH 26308	$128,410	328.00	90.50	69.50	5,443
LEVH 26310	$129,410	328.00	90.50	69.50	5,480
LEVH 26312	$130,440	328.00	90.50	69.50	5,554
LEVH 26408	$131,450	328.00	90.50	69.50	5,902
LEVH 26410	$132,460	328.00	90.50	69.50	5,952
LEVH 26412	$133,460	328.00	90.50	69.50	6,050

See Levitor II Options for fin coating, legs, hinged fan panel, gravity damper, and painted housing pricing.

Prices, product availability, and specifications are subject to change without notice.

EC MICROCHANNEL AIR-COOLED MODELS - MXH

TWO FAN WIDE MODELS	LIST PRICE	THR in MBH (000) @ 10° F TD R-404A / R-507A	THR in MBH (000) @ 10° F TD R-448A / R-449A	AIR FLOW (CFM)	DIMENSIONS (IN)			SHIP WGT (LB)	REFRIGERANT CHARGE	
					L	W	H *		SUMMER R-404A (LB)	WINTER R-404A (LB)
MXH-02	$26,550	171.1	167.0	27,100	44.00	90.25	54.00	674	4	12
MXH-04	$49,220	342.2	334.0	54,200	88.00	90.25	54.00	1,398	15	26
MXH-06	$74,420	513.3	501.0	81,300	132.00	90.25	54.00	2,047	23	40
MXH-08	$96,620	684.4	668.0	108,400	176.00	90.25	54.00	2,736	40	55
MXH-10	$121,880	855.5	835.0	135,500	220.00	90.25	54.00	3,420	52	77
MXH-12	$150,110	1026.6	1002.0	162,600	264.00	90.25	54.00	4,069	80	88

** Add 22 inches to height when ship loose legs are required. Add 42 inches to height when extended legs are specified. Add 18 inches to height for mounted receivers.*

Prices, product availability, and specifications are subject to change without notice.

EC LEVITOR II FLUID COOLER MODELS - FEVH

ONE FAN WIDE MODELS	LIST PRICE	INTERNAL VOLUME (GAL)	DIMENSIONS (IN)			SHIP WGT (LB)	ELECTROFIN COATED COIL	POLYESTER FIN COATING
			L	W	H			
11208	$12,920	3.5	58.00	45.25	65.00	504	$1,250	$1,030
11210	$13,010	3.6	58.00	45.25	65.00	506	$1,250	$1,040
11212	$13,090	3.7	58.00	45.25	65.00	511	$1,250	$1,050
11308	$13,490	5.0	58.00	45.25	65.00	538	$1,370	$1,110
11310	$13,570	5.2	58.00	45.25	65.00	541	$1,370	$1,130
11312	$13,670	5.3	58.00	45.25	65.00	550	$1,370	$1,160
11408	$13,740	6.5	58.00	45.25	65.00	572	$1,420	$1,170
11410	$13,830	6.5	58.00	45.25	65.00	572	$1,420	$1,180
11412	$13,930	6.9	58.00	45.25	65.00	585	$1,420	$1,190
12208	$20,760	6.4	112.00	45.25	65.00	852	$1,790	$1,460
12210	$20,920	6.5	112.00	45.25	65.00	855	$1,790	$1,480
12212	$21,090	6.6	112.00	45.25	65.00	863	$1,790	$1,510
12308	$21,430	9.5	112.00	45.25	65.00	917	$1,910	$1,580
12310	$21,660	9.6	112.00	45.25	65.00	923	$1,910	$1,600
12312	$22,080	9.7	112.00	45.25	65.00	936	$1,910	$1,650
12408	$24,060	16.4	112.00	45.25	65.00	984	$2,440	$1,930
12410	$24,610	16.5	112.00	45.25	65.00	992	$2,440	$2,030
12412	$25,150	16.6	112.00	45.25	65.00	1,009	$2,440	$2,120
13210	$30,820	9.5	166.00	45.25	65.00	1,242	$2,680	$2,230
13212	$31,150	9.6	166.00	45.25	65.00	1,261	$2,680	$2,270
13308	$31,500	13.7	166.00	45.25	65.00	1,327	$2,850	$2,310
13310	$31,840	13.9	166.00	45.25	65.00	1,351	$2,850	$2,370
13312	$32,410	14.1	166.00	45.25	65.00	1,369	$2,850	$2,460
13408	$34,480	18.3	166.00	45.25	65.00	1,426	$3,440	$2,770
13410	$35,260	18.5	166.00	45.25	65.00	1,454	$3,440	$2,880
13412	$36,020	18.7	166.00	45.25	65.00	1,478	$3,440	$2,980
14308	$41,760	18.2	220.00	45.25	65.00	1,725	$3,760	$3,110
14310	$41,950	18.4	220.00	45.25	65.00	1,737	$3,760	$3,130
14312	$42,770	18.6	220.00	45.25	65.00	1,762	$3,760	$3,260
14408	$45,630	24.0	220.00	45.25	65.00	1,838	$4,540	$3,660
14410	$46,250	24.3	220.00	45.25	65.00	1,871	$4,540	$3,780
14412	$47,620	24.6	220.00	45.25	65.00	1,904	$4,540	$3,980
15308	$55,500	22.5	274.00	45.25	69.50	2,382	$5,380	$4,420
15310	$55,940	22.7	274.00	45.25	69.50	2,391	$5,380	$4,470
15312	$56,360	22.9	274.00	45.25	69.50	2,422	$5,380	$4,550
15408	$56,760	30.2	274.00	45.25	69.50	2,516	$5,750	$4,600
15410	$58,070	30.3	274.00	45.25	69.50	2,561	$5,750	$4,800
15412	$59,410	30.5	274.00	45.25	69.50	2,602	$5,750	$4,980
16308	$64,940	27.0	328.00	45.25	69.50	2,991	$6,300	$5,180
16310	$65,440	27.2	328.00	45.25	69.50	2,915	$6,300	$5,250
16312	$65,960	27.4	328.00	45.25	69.50	2,952	$6,300	$5,340
16408	$66,450	35.7	328.00	45.25	69.50	3,126	$6,590	$5,410
16410	$66,980	36.0	328.00	45.25	69.50	3,150	$6,590	$5,490
16412	$67,480	36.4	328.00	45.25	69.50	3,200	$6,590	$5,540

TWO FAN WIDE MODELS	LIST PRICE	INTERNAL VOLUME (GAL)	DIMENSIONS (IN)			SHIP WGT (LB)	ELECTROFIN COATED COIL	POLYESTER FIN COATING
			L	W	H			
-	-	-	-	-	-	-	-	-
-	-	-	-	-	-	-	-	-
-	-	-	-	-	-	-	-	-
-	-	-	-	-	-	-	-	-
-	-	-	-	-	-	-	-	-
-	-	-	-	-	-	-	-	-
-	-	-	-	-	-	-	-	-
-	-	-	-	-	-	-	-	-
-	-	-	-	-	-	-	-	-
22208	$40,270	12.4	112.00	90.50	65.00	1,579	$3,540	$2,910
22210	$40,610	12.6	112.00	90.50	65.00	1,588	$3,540	$2,950
22212	$40,960	12.8	112.00	90.50	65.00	1,604	$3,540	$2,980
22308	$41,650	18.7	112.00	90.50	65.00	1,725	$3,800	$3,100
22310	$42,090	18.9	112.00	90.50	65.00	1,713	$3,800	$3,170
22312	$42,920	19.1	112.00	90.50	65.00	1,750	$3,800	$3,300
22408	$46,870	24.8	112.00	90.50	65.00	1,847	$4,820	$3,860
22410	$47,950	25.0	112.00	90.50	65.00	1,863	$4,820	$4,020
22412	$49,020	25.3	112.00	90.50	65.00	1,896	$4,820	$4,180
23210	$60,370	18.5	166.00	90.50	65.00	2,277	$5,290	$4,410
23212	$61,070	18.7	166.00	90.50	65.00	2,314	$5,290	$4,520
23308	$61,750	27.4	166.00	90.50	65.00	2,476	$5,650	$4,610
23310	$62,410	27.7	166.00	90.50	65.00	2,495	$5,650	$4,700
23312	$63,520	27.9	166.00	90.50	65.00	2,532	$5,650	$4,870
23408	$68,220	36.7	166.00	90.50	65.00	2,673	$6,870	$5,550
23410	$69,180	36.9	166.00	90.50	65.00	2,697	$6,870	$5,720
23412	$70,050	37.1	166.00	90.50	65.00	2,746	$6,870	$5,930
24308	$82,170	36.3	220.00	90.50	65.00	3,097	$7,470	$6,180
24310	$82,550	36.5	220.00	90.50	65.00	3,222	$7,470	$6,230
24312	$84,200	36.7	220.00	90.50	65.00	3,271	$7,470	$6,480
24408	$89,890	48.4	220.00	90.50	65.00	3,460	$9,000	$7,310
24410	$91,140	48.6	220.00	90.50	65.00	3,493	$9,000	$7,500
24412	$93,840	48.8	220.00	90.50	65.00	3,559	$9,000	$7,900
25308	$109,580	45.2	274.00	90.50	69.50	4,438	$10,680	$8,770
25310	$110,460	45.4	274.00	90.50	69.50	4,468	$10,680	$8,900
25312	$111,300	45.6	274.00	90.50	69.50	4,530	$10,680	$9,020
25408	$112,140	60.3	274.00	90.50	69.50	4,765	$11,450	$9,140
25410	$114,730	60.5	274.00	90.50	69.50	4,806	$11,450	$9,530
25412	$117,360	60.7	274.00	90.50	69.50	4,889	$11,450	$9,910
26308	$128,410	54.2	328.00	90.50	69.50	5,443	$12,520	$10,300
26310	$129,410	54.4	328.00	90.50	69.50	5,480	$12,520	$10,430
26312	$130,440	54.6	328.00	90.50	69.50	5,554	$12,520	$10,590
26408	$131,450	72.1	328.00	90.50	69.50	5,902	$13,060	$10,740
26410	$132,460	72.3	328.00	90.50	69.50	5,952	$13,060	$10,890
26412	$133,460	72.5	328.00	90.50	69.50	6,050	$13,060	$11,040

Note:
See Fluid Cooler Options for fin coating, legs, hinged fan panel, gravity damper, and painted housing pricing.

Prices, product availability, and specifications are subject to change without notice.

EC LEVITOR II COOLER PANEL NOMENCLATURE

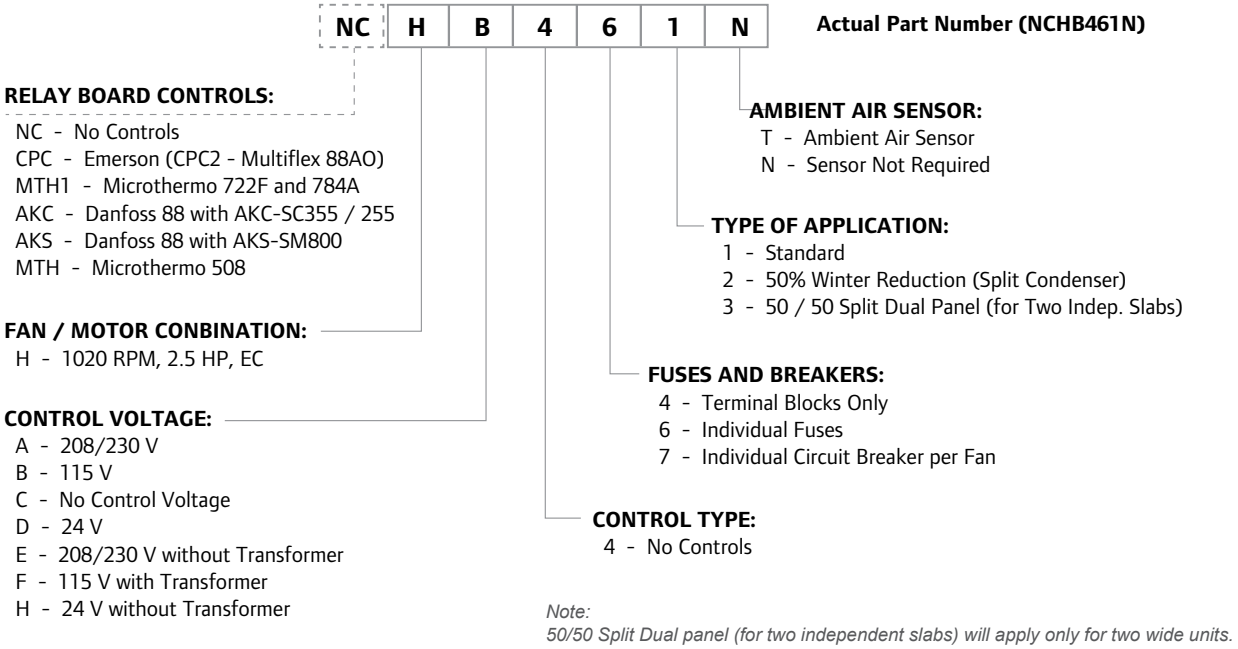

Note:
50/50 Split Dual panel (for two independent slabs) will apply only for two wide units.

EC MICROCHANNEL AIR-COOLED CONTROL PANEL NOMENCLATURE

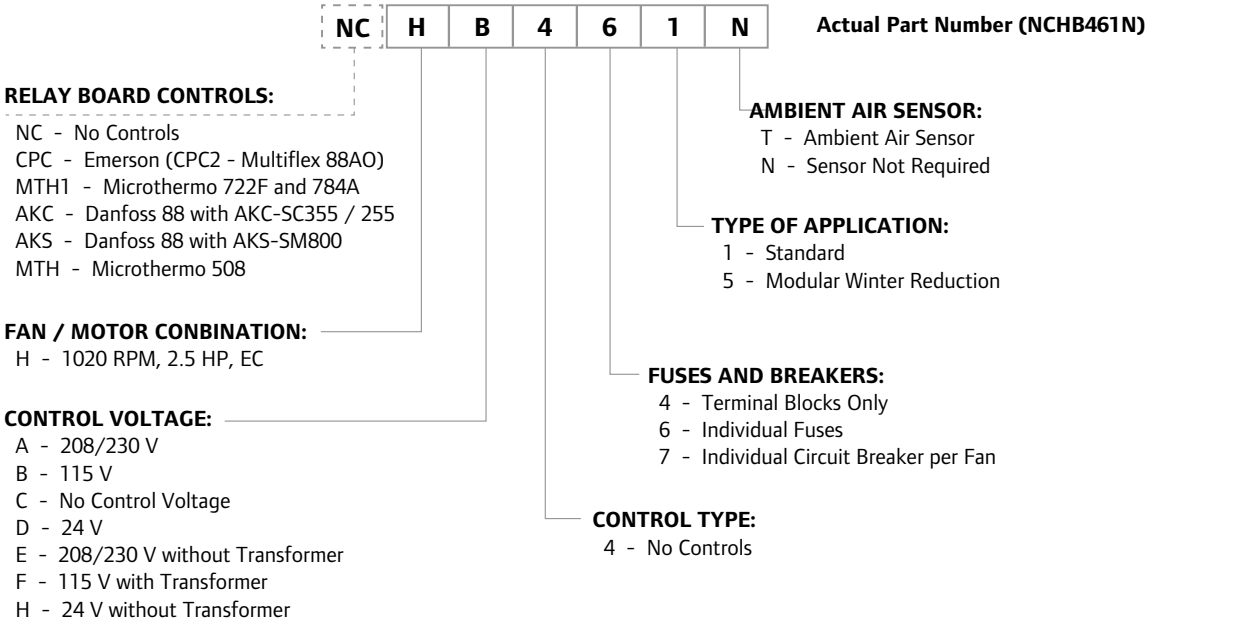

Prices, product availability, and specifications are subject to change without notice.

EC LEVITOR II CONTROL PANELS

FAN CONFIGURATION	461
1 X 1	$660
1 X 2	$870
1 X 3	$880
1 X 4	$1,210
1 X 5	$1,380
1 X 6	$1,530
2 X 2	$1,710
2 X 3	$2,230
2 X 4	$2,720
2 X 5	$3,170
2 X 6	$3,640

CONTROL DESCRIPTION

MODEL 461

No Fan Speed Controls,

Individual Fuses

Note: The heading of each column is the last 3 numbers in the Control Panel Nomenclature.

OPTIONS	ADD $
50% Reduction Relay (2X Only)	$290
50 / 50 Split (2X Only)	**Two 1 X Panel**
Phase Loss Monitor — already included	$0
Mounted Non-Fused Disconnect	$1,860
Mounted Fused Disconnect (Less Fuses)	$2,070
Control Circuit Cutoff Switch	$330
230V	$640
Drop Leg Transducer Tap with Transducer	$1,610
Drop Leg Pressure Transducer Tap	$330
Danfoss BP5 Ambient Temp Sensor with Enclosure	$640
Rochester Liquid Level Gauge with Alarm Circuit	$2,940
Hot Gas Header	$1,680
Rupture Disc Assembly	$1,280
RELAY BOARDS	
Ambient Air Sensor - CPC, Danfoss, Novar	$350
CPC-4AO Analog Board	$2,720
CPC2 - Multiflex 88AO Board	$3,650
DAN - Danfoss MX06D with Transducer and Temp Sensor	$2,650
Danfoss 4 R/O Board	$2,720
Danfoss Analog Board AK2	$2,720

Note: For panels without fuses, consult factory.

Contact factory for pricing of Electronic Controllers and Relay Boards.

Prices, product availability, and specifications are subject to change without notice.

EC FLUID COOLER CONTROL PANELS and ELECTRICAL INFORMATION

FAN CONFIGURATION	461
1 X 1	$660
1 X 2	$860
1 X 3	$880
1 X 4	$1,210
1 X 5	$1,380
1 X 6	$1,520
2 X 2	$1,710
2 X 3	$2,220
2 X 4	$2,720
2 X 5	$3,170
2 X 6	$3,640

CONTROL DESCRIPTION

MODEL 461

No Fan Speed Controls,
Individual Fuses

Note: The heading of each column is the last 3 numbers in the Control Panel Nomenclature.

OPTIONS	ADD $
Phase Loss Monitor — already included	$0
NEMA 4 Enclosure with Terminal Blocks	$700
NEMA 4X Enclosure 30" Fan Units	$3,450
Mounted Non-Fused Disconnect	$1,860

Prices, product availability, and specifications are subject to change without notice.

EC MICROCHANNEL AIR-COOLED CONTROL PANELS

FAN CONFIGURATION	461
02	$860
04	$1,710
06	$2,220
08	$2,720
10	$3,170
12	$3,640

CONTROL DESCRIPTION

MODEL 461

No Fan Speed Controls,
Individual Fuses

OPTIONS	ADD $
Phase Loss Monitor — already included	$0
Mounted Non-Fused Disconnect	$1,860
RELAY BOARDS	
Ambient Air Sensor - CPC, Danfoss, Novar	$350
CPC - 4AO Analog Board	$2,720
Danfoss 4 R/O Board	$2,720
Danfoss Analog Board AK2	$2,720
CPC - Multiflex 88 Board	$3,240

Note: For panels without fuses, consult factory.

Contact factory for pricing of Electronic Controllers and Relay Boards.

Prices, product availability, and specifications are subject to change without notice.

HIGH EFFICIENCY H-SERIES PRODUCT DESCRIPTION - CONDENSING UNITS

Version: August 2025

HIGH EFFICIENCY H-SERIES MODEL KEY

H	D	S	D	-	100	0	L	S	K	F	F	-	D

SERIES

UNIT TYPE:
- E - Indoor, High Efficiency
- D - Outdoor, High Efficiency

BASE:
- S - Standard
- H - Heavy-Duty

COMPRESSOR TYPE:
- D - Copeland Discus
- Z - Copeland Scroll
- B - Bitzer Ecoline, Motor 2
- E - Bitzer Ecoline, Motor 1
- S - Copeland Semi-Hermetic

COMPRESSOR HORSEPOWER:
- 005 - 0.5 HP
- 030 - 3.0 HP
- 100 - 10.0 HP
- 150 - 15.0 HP

ALTERNATIVE:
- 0 - Basic
- 1 - First Alternative
- 2 - Second Alternative

TEMPERATURE RANGE:
- M - Medium (Max. Evap. Temp. = +35° F)
- L - Low (Max. Evap. Temp. = +0° F)

REFRIGERANT:
- S - R-404A
- P - R-507A
- Q - R-407A
- F - R-407F
- T - R-448A
- R - R-449A

VOLTAGE:
- D - 208-230 V/1 PH/60 HZ
- K - 208-230 V/3 PH/60 HZ
- M - 460 V/3 PH/60 HZ
- P - 575 V/3 PH/60 HZ
- U - 380 V/3 PH/50 HZ

CONDENSER SIZE:
- A - Small, 3 Row, 1 Fan
- B - Medium, 3 Row, 1 Fan
- D - Medium, 4 Row, 2 Fan
- F - Large, 4 Row, 4 Fan
- J - XLarge, 4 Row, 6 Fan

RECEIVER SIZE:
- A - 6" x 12"
- B - 6" x 18"
- C - 6" x 23"
- D - 6" x 30"
- E - 8.625" x 30"
- F - 10.75" x 30"
- G - 10.75" x 38"
- H - 12.75" x 30"
- X - No Receiver

DOE:
- D - DOE / NRCan
- A - Non-Regulated

NOM The High Efficiency H-Series Condensing Units within NOM-012-ENER-2019 scope are Energy efficiency certified under the NOM-012-ENER-2019 standard for applications in Mexico. Please check each table in the bulletin for details.

NOTE: Units are ordered refrigerant specific (i.e. "S" for R-404A) but will include other refrigerants that can also be used on the data plate.

This product line includes AWEF values and can be applied with refrigeration loads regulated by DOE / NRCan.

See technical bulletin for published AWEF values.

Prices, product availability, and specifications are subject to change without notice.

HIGH EFFICIENCY H-SERIES PRODUCT DESCRIPTION - CONDENSING UNITS

Version: August 2025

HDSZ - HIGH EFFICIENCY H-SERIES COPELAND SCROLL CONDENSING UNITS

UNIT MODEL	COMPRESSOR MODEL	LIST PRICE			4 YEAR EXTENDED COMPRESSOR WARRANTY	TECHNICAL SPECIFICATIONS				SHIP WGT (LB)
		208/1/60 D	208/3/60 K	460/3/60 M		CONDENSER AND CABINET SIZE	RCVR SIZE	CONNECTIONS (IN) LIQUID	CONNECTIONS (IN) SUCTION	
Scroll - Medium Temperature R-407F										
HDSZ-0080MF#AB-A	ZB06KAE	$8,130	$8,080	-	$930	A / Small	B	1/2	7/8	400
HDSZ-0080MF#BC-A	ZB06KAE	$9,490	$9,440	-	$930	B / Medium	C	1/2	7/8	650
HDSZ-0100MF#AB-A	ZB07KAE	$8,210	$8,170	-	$930	A / Small	B	1/2	7/8	400
HDSZ-0100MF#BC-A	ZB07KAE	$9,570	$9,530	-	$930	B / Medium	C	1/2	7/8	650
HDSZ-0120MF#AB-A	ZB08KAE	$8,290	$8,250	-	$930	A / Small	B	1/2	7/8	400
HDSZ-0120MF#BC-A	ZB08KAE	$9,650	$9,610	-	$930	B / Medium	C	1/2	7/8	650
HDSZ-0200MF#BC-D	ZB15KCE	$8,260	$8,260	$8,690	$930	B / Medium	C	1/2	7/8	650
HDSZ-0200MF#DE-D	ZB15KCE	$10,230	$10,220	$10,720	$930	D / Medium	E	1/2	7/8	650
HDSZ-0250MF#BC-D	ZB19KCE	-	$7,290	$7,730	$930	B / Medium	C	1/2	7/8	650
HDSZ-0250MF#DE-D	ZB19KCE	-	$9,260	$9,750	$930	D / Medium	E	1/2	7/8	650
HDSZ-0300MF#BC-D	ZB21KCE	$7,760	$7,750	$8,190	$930	B / Medium	C	1/2	7/8	650
HDSZ-0300MF#DE-D	ZB21KCE	$9,720	$9,720	$10,210	$930	D / Medium	E	1/2	7/8	650
HDSZ-0350MF#BC-D	ZB26KCE	$7,830	$7,820	$8,260	$930	B / Medium	C	1/2	7/8	650
HDSZ-0350MF#DE-D	ZB26KCE	$9,800	$9,790	$10,290	$930	D / Medium	E	1/2	7/8	650
HDSZ-0400MF#BC-D	ZB30KCE	$8,200	$8,190	$8,620	$1,060	B / Medium	C	5/8	7/8	650
HDSZ-0400MF#DE-D	ZB30KCE	$10,160	$10,160	$10,650	$1,060	D / Medium	E	5/8	7/8	650
HDSZ-0500MF#DE-D	ZB38KCE	$9,930	$9,920	$10,410	$1,060	D / Medium	E	5/8	7/8	650
HDSZ-0500MF#FF-D	ZB38KCE	$13,140	$13,130	$13,750	$1,060	F / Large	F	5/8	7/8	1,250
HDSZ-0600MF#FF-D	ZB48KCE	-	$13,660	$14,280	$1,060	F / Large	F	5/8	7/8	1,250
HDSZ-0600MF#JH-D	ZB48KCE	-	$18,710	$19,450	$1,060	J / X-Large	H	5/8	7/8	1,575
HDSZ-0750MF#FF-D	ZB58K5E	-	$15,920	$16,520	$1,910	F / Large	F	5/8	1-3/8	1,250
HDSZ-0750MF#JH-D	ZB58K5E	-	$20,970	$21,700	$1,910	J / X-Large	H	5/8	1-3/8	1,575
HDSZ-1000MF#FF-D	ZB76K5E	-	$18,110	$18,620	$1,910	F / Large	F	5/8	1-3/8	1,250
HDSZ-1000MF#JH-D	ZB76K5E	-	$23,160	$23,800	$1,910	J / X-Large	H	5/8	1-3/8	1,575
HDSZ-1300MF#JH-D	ZB95K5E	-	$23,100	$23,700	$2,270	J / X-Large	H	7/8	1-3/8	1,575
HDSZ-1500MF#JH-A	ZB114K5E	-	$23,410	$23,810	$2,270	J / X-Large	H	7/8	1-3/8	1,575

UNIT MODEL	COMPRESSOR MODEL	LIST PRICE			4 YEAR EXTENDED COMPRESSOR WARRANTY	TECHNICAL SPECIFICATIONS				SHIP WGT (LB)
		208/1/60 D	208/3/60 K	460/3/60 M		CONDENSER AND CABINET SIZE	RCVR SIZE	CONNECTIONS (IN) LIQUID	CONNECTIONS (IN) SUCTION	
Scroll - Low Temperature R-407F										
HDSZ-0200LF#AB-D	ZF06K4E	$7,300	$7,300	$7,730	$1,100	A / Small	B	1/2	7/8	400
HDSZ-0200LF#BC-D	ZF06K4E	$8,660	$8,660	$9,090	$1,100	B / Medium	C	1/2	7/8	650
HDSZ-0250LF#BC-D	ZF08K4E	$8,840	$8,840	$9,270	$1,100	B / Medium	C	1/2	7/8	650
HDSZ-0250LF#DE-D	ZF08K4E	$10,810	$10,810	$11,300	$1,100	D / Medium	E	1/2	7/8	650
HDSZ-0300LF#AB-D	ZF09K4E	$7,730	$7,720	$8,160	$1,100	A / Small	B	1/2	7/8	400
HDSZ-0300LF#BC-D	ZF09K4E	$9,080	$9,080	$9,510	$1,100	B / Medium	C	1/2	7/8	650
HDSZ-0350LF#BC-D	ZF11K4E	$8,640	$8,630	$9,070	$1,100	B / Medium	C	1/2	7/8	650
HDSZ-0350LF#DE-D	ZF11K4E	$10,600	$10,600	$11,100	$1,100	D / Medium	E	1/2	7/8	650
HDSZ-0400LF#BC-D	ZF13K4E	$8,930	$8,920	$9,360	$1,180	B / Medium	C	1/2	7/8	650
HDSZ-0400LF#DE-D	ZF13K4E	$10,900	$10,890	$11,390	$1,180	D / Medium	E	1/2	7/8	650
HDSZ-0500LF#BC-D	ZF15K4E	$9,320	$9,310	$9,740	$1,180	B / Medium	C	1/2	7/8	650
HDSZ-0500LF#DE-D	ZF15K4E	$11,280	$11,280	$11,770	$1,180	D / Medium	E	1/2	7/8	650
HDSZ-0600LF#BC-D	ZF18K4E	-	$9,400	$9,840	$1,180	B / Medium	C	5/8	7/8	650
HDSZ-0600LF#DE-D	ZF18K4E	-	$11,370	$11,860	$1,180	D / Medium	E	5/8	7/8	650
HDSZ-0750LF#DE-A	ZF25K4E	-	$14,420	$14,920	$1,700	D / Medium	E	5/8	1-3/8	650
HDSZ-0750LF#FF-D	ZF25K4E	-	$17,630	$18,250	$1,700	F / Large	F	5/8	1-3/8	1,250
HDSZ-1000LF#DE-A	ZF34K5E	-	$17,610	$18,060	$2,470	D / Medium	E	5/8	1-3/8	650
HDSZ-1000LF#FF-D	ZF34K5E	-	$20,820	$21,390	$2,470	F / Large	F	5/8	1-3/8	1,250

- HE H-SERIES OPTIONS PAGE HAS STANDARD FEATURES AND BASIC OPTIONS LIST. USE H-SERIES SOFTWARE FOR ADDITIONAL CUSTOMIZATION.
- ORDERS MUST INCLUDE THE FULL MODEL NUMBER INCLUDING CONDENSER AND RECEIVER "HDSZ-0200MFKAB"
Standard options on HDSZ units include sealed liquid drier, pump down switch, time clock, and crating.

Prices, product availability, and specifications are subject to change without notice.

HIGH EFFICIENCY H-SERIES PRODUCT DESCRIPTION - CONDENSING UNITS

Version: August 2025

HDSZ - HIGH EFFICIENCY H-SERIES COPELAND SCROLL CONDENSING UNITS

UNIT MODEL	COMPRESSOR MODEL	LIST PRICE			4 YEAR EXTENDED COMPRESSOR WARRANTY	TECHNICAL SPECIFICATIONS				SHIP WGT (LB)
		208/1/60 D	208/3/60 K	460/3/60 M		CONDENSER AND CABINET SIZE	RCVR SIZE	CONNECTIONS (IN) LIQUID	CONNECTIONS (IN) SUCTION	
Scroll - Medium Temperature R-507A										
HDSZ-0080MP#AB-A	ZB06KAE	$8,130	$8,080	-	$930	A / Small	B	1/2	7/8	400
HDSZ-0080MP#BC-A	ZB06KAE	$9,490	$9,440	-	$930	B / Medium	C	1/2	7/8	650
HDSZ-0100MP#AB-A	ZB07KAE	$8,210	$8,170	-	$930	A / Small	B	1/2	7/8	400
HDSZ-0100MP#BC-A	ZB07KAE	$9,570	$9,530	-	$930	B / Medium	C	1/2	7/8	650
HDSZ-0120MP#AB-A	ZB08KAE	$8,290	$8,250	-	$930	A / Small	B	1/2	7/8	400
HDSZ-0120MP#BC-A	ZB08KAE	$9,650	$9,610	-	$930	B / Medium	C	1/2	7/8	650
HDSZ-0130MP#AB-A	ZS09KAE	$8,490	$8,390	$8,830	$930	A / Small	B	1/2	7/8	400
HDSZ-0130MP#BC-D	ZS09KAE	$9,850	$9,750	$10,190	$930	B / Medium	C	1/2	7/8	650
HDSZ-0150MP#AB-D	ZS11KAE	$8,680	$8,570	$9,010	$930	A / Small	B	1/2	7/8	400
HDSZ-0150MP#BC-D	ZS11KAE	$10,040	$9,930	$10,370	$930	B / Medium	C	1/2	7/8	650
HDSZ-0180MP#AB-D	ZS13KAE	$8,680	$8,580	$9,010	$930	A / Small	B	1/2	7/8	400
HDSZ-0180MP#BC-D	ZS13KAE	$10,040	$9,940	$10,370	$930	B / Medium	C	1/2	7/8	650
HDSZ-0200MP#BC-D	ZB15KCE	$8,260	$8,260	$8,690	$930	B / Medium	C	1/2	7/8	650
HDSZ-0200MP#DE-D	ZB15KCE	$10,230	$10,220	$10,720	$930	D / Medium	E	1/2	7/8	650
HDSZ-0250MP#BC-D	ZB19KCE	-	$7,290	$7,730	$930	B / Medium	C	1/2	7/8	650
HDSZ-0250MP#DE-D	ZB19KCE	-	$9,260	$9,750	$930	D / Medium	E	1/2	7/8	650
HDSZ-0300MP#BC-D	ZB21KCE	$7,760	$7,750	$8,190	$930	B / Medium	C	1/2	7/8	650
HDSZ-0300MP#DE-D	ZB21KCE	$9,720	$9,720	$10,210	$930	D / Medium	E	1/2	7/8	650
HDSZ-0350MP#BC-D	ZB26KCE	$7,830	$7,820	$8,260	$930	B / Medium	C	1/2	7/8	650
HDSZ-0350MP#DE-D	ZB26KCE	$9,800	$9,790	$10,290	$930	D / Medium	E	1/2	7/8	650
HDSZ-0400MP#BC-D	ZB30KCE	$8,200	$8,190	$8,620	$1,060	B / Medium	C	5/8	7/8	650
HDSZ-0400MP#DE-D	ZB30KCE	$10,160	$10,160	$10,650	$1,060	D / Medium	E	5/8	7/8	650
HDSZ-0500MP#DE-D	ZB38KCE	$9,960	$9,940	$10,440	$1,060	D / Medium	E	5/8	7/8	650
HDSZ-0500MP#FF-D	ZB38KCE	$13,170	$13,160	$13,780	$1,060	F / Large	F	5/8	7/8	1,250
HDSZ-0600MP#FF-D	ZB48KCE	-	$13,660	$14,280	$1,060	F / Large	F	5/8	7/8	1,250
HDSZ-0600MP#JH-D	ZB48KCE	-	$18,710	$19,450	$1,060	J / X-Large	H	5/8	7/8	1,575
HDSZ-0750MP#FF-D	ZB58K5E	-	$15,920	$16,520	$1,910	F / Large	F	5/8	1-3/8	1,250
HDSZ-0750MP#JH-D	ZB58K5E	-	$20,970	$21,700	$1,910	J / X-Large	H	5/8	1-3/8	1,575
HDSZ-1000MP#FF-D	ZB76K5E	-	$18,160	$18,680	$1,910	F / Large	F	5/8	1-3/8	1,250
HDSZ-1000MP#JH-D	ZB76K5E	-	$23,210	$23,850	$1,910	J / X-Large	H	5/8	1-3/8	1,575
HDSZ-1300MP#JH-D	ZB95K5E	-	$23,100	$23,700	$2,270	J / X-Large	H	7/8	1-3/8	1,575
HDSZ-1500MP#JH-D	ZB114K5E	-	$23,410	$23,810	$2,270	J / X-Large	H	7/8	1-3/8	1,575

UNIT MODEL	COMPRESSOR MODEL	LIST PRICE			4 YEAR EXTENDED COMPRESSOR WARRANTY	TECHNICAL SPECIFICATIONS				SHIP WGT (LB)
		208/1/60 D	208/3/60 K	460/3/60 M		CONDENSER AND CABINET SIZE	RCVR SIZE	CONNECTIONS (IN) LIQUID	CONNECTIONS (IN) SUCTION	
Scroll - Low Temperature R-507A										
HDSZ-0200LP#AB-A	ZF06K4E	$7,300	$7,300	$7,730	$1,100	A / Small	B	1/2	7/8	400
HDSZ-0200LP#BC-D	ZF06K4E	$8,660	$8,660	$9,090	$1,100	B / Medium	C	1/2	7/8	650
HDSZ-0250LP#BC-D	ZF08K4E	$8,840	$8,840	$9,270	$1,100	B / Medium	C	1/2	7/8	650
HDSZ-0250LP#DE-D	ZF08K4E	$10,810	$10,810	$11,300	$1,100	D / Medium	E	1/2	7/8	650
HDSZ-0300LP#AB-D	ZF09K4E	$7,730	$7,720	$8,160	$1,100	A / Small	B	1/2	7/8	400
HDSZ-0300LP#BC-D	ZF09K4E	$9,080	$9,080	$9,510	$1,100	B / Medium	C	1/2	7/8	650
HDSZ-0350LP#BC-D	ZF11K4E	$8,640	$8,630	$9,070	$1,100	B / Medium	C	1/2	7/8	650
HDSZ-0350LP#DE-D	ZF11K4E	$10,600	$10,600	$11,100	$1,100	D / Medium	E	1/2	7/8	650
HDSZ-0400LP#BC-D	ZF13K4E	$8,930	$8,920	$9,360	$1,180	B / Medium	C	1/2	7/8	650
HDSZ-0400LP#DE-D	ZF13K4E	$10,900	$10,890	$11,390	$1,180	D / Medium	E	1/2	7/8	650
HDSZ-0500LP#BC-D	ZF15K4E	$9,320	$9,310	$9,740	$1,180	B / Medium	C	1/2	7/8	650
HDSZ-0500LP#DE-D	ZF15K4E	$11,280	$11,280	$11,770	$1,180	D / Medium	E	1/2	7/8	650
HDSZ-0600LP#BC-D	ZF18K4E	-	$9,400	$9,840	$1,180	B / Medium	C	5/8	7/8	650
HDSZ-0600LP#DE-D	ZF18K4E	-	$11,370	$11,860	$1,180	D / Medium	E	5/8	7/8	650
HDSZ-0750LP#DE-D	ZF25K4E	-	$14,420	$14,920	$1,700	D / Medium	E	5/8	1-3/8	650
HDSZ-0750LP#FF-D	ZF25K4E	-	$17,630	$18,250	$1,700	F / Large	F	5/8	1-3/8	1,250
HDSZ-1000LP#DE-D	ZF34K5E	-	$17,640	$18,080	$2,470	D / Medium	E	5/8	1-3/8	650
HDSZ-1000LP#FF-D	ZF34K5E	-	$20,850	$21,420	$2,470	F / Large	F	5/8	1-3/8	1,250

- HE H-SERIES OPTIONS PAGE HAS STANDARD FEATURES AND BASIC OPTIONS LIST. USE H-SERIES SOFTWARE FOR ADDITIONAL CUSTOMIZATION.
- ORDERS MUST INCLUDE THE FULL MODEL NUMBER INCLUDING CONDENSER AND RECEIVER "HDSZ-0200MPKAB"
Standard options on HDSZ units include sealed liquid drier, pump down switch, time clock, and crating.

Prices, product availability, and specifications are subject to change without notice.

HIGH EFFICIENCY H-SERIES PRODUCT DESCRIPTION - CONDENSING UNITS

Version: August 2025

HDSZ - HIGH EFFICIENCY H-SERIES COPELAND SCROLL CONDENSING UNITS

UNIT MODEL	COMPRESSOR MODEL	LIST PRICE			4 YEAR EXTENDED COMPRESSOR WARRANTY	TECHNICAL SPECIFICATIONS				SHIP WGT (LB)
		208/1/60 D	208/3/60 K	460/3/60 M		CONDENSER AND CABINET SIZE	RCVR SIZE	CONNECTIONS (IN) LIQUID	CONNECTIONS (IN) SUCTION	
Scroll - Medium Temperature R-407A										
HDSZ-0080MQ#AB-A	ZB06KAE	$8,130	$8,080	-	$930	A / Small	B	1/2	7/8	400
HDSZ-0080MQ#BC-A	ZB06KAE	$9,490	$9,440	-	$930	B / Medium	C	1/2	7/8	650
HDSZ-0100MQ#AB-A	ZB07KAE	$8,210	$8,170	-	$930	A / Small	B	1/2	7/8	400
HDSZ-0100MQ#BC-A	ZB07KAE	$9,570	$9,530	-	$930	B / Medium	C	1/2	7/8	650
HDSZ-0120MQ#AB-A	ZB08KAE	$8,290	$8,250	-	$930	A / Small	B	1/2	7/8	400
HDSZ-0120MQ#BC-A	ZB08KAE	$9,650	$9,610	-	$930	B / Medium	C	1/2	7/8	650
HDSZ-0130MQ#AB-D	ZS09KAE	$8,490	$8,390	$8,830	$930	A / Small	B	1/2	7/8	400
HDSZ-0130MQ#BC-D	ZS09KAE	$9,850	$9,750	$10,190	$930	B / Medium	C	1/2	7/8	650
HDSZ-0150MQ#AB-D	ZS11KAE	$8,680	$8,570	$9,010	$930	A / Small	B	1/2	7/8	400
HDSZ-0150MQ#BC-D	ZS11KAE	$10,040	$9,930	$10,370	$930	B / Medium	C	1/2	7/8	650
HDSZ-0180MQ#AB-D	ZS13KAE	$8,680	$8,580	$9,010	$930	A / Small	B	1/2	7/8	400
HDSZ-0180MQ#BC-D	ZS13KAE	$10,040	$9,940	$10,370	$930	B / Medium	C	1/2	7/8	650
HDSZ-0200MQ#BC-D	ZB15KCE	$8,260	$8,260	$8,690	$930	B / Medium	C	1/2	7/8	650
HDSZ-0200MQ#DE-D	ZB15KCE	$10,230	$10,220	$10,720	$930	D / Medium	E	1/2	7/8	650
HDSZ-0250MQ#BC-D	ZB19KCE	-	$7,290	$7,730	$930	B / Medium	C	1/2	7/8	650
HDSZ-0250MQ#DE-D	ZB19KCE	-	$9,260	$9,750	$930	D / Medium	E	1/2	7/8	650
HDSZ-0300MQ#BC-D	ZB21KCE	$7,760	$7,750	$8,190	$930	B / Medium	C	1/2	7/8	650
HDSZ-0300MQ#DE-D	ZB21KCE	$9,720	$9,720	$10,210	$930	D / Medium	E	1/2	7/8	650
HDSZ-0350MQ#BC-D	ZB26KCE	$7,830	$7,820	$8,260	$930	B / Medium	C	1/2	7/8	650
HDSZ-0350MQ#DE-D	ZB26KCE	$9,800	$9,790	$10,290	$930	D / Medium	E	1/2	7/8	650
HDSZ-0400MQ#BC-D	ZB30KCE	$8,200	$8,190	$8,620	$1,060	B / Medium	C	5/8	7/8	650
HDSZ-0400MQ#DE-D	ZB30KCE	$10,160	$10,160	$10,650	$1,060	D / Medium	E	5/8	7/8	650
HDSZ-0500MQ#DE-D	ZB38KCE	$9,930	$9,920	$10,410	$1,060	D / Medium	E	5/8	7/8	650
HDSZ-0500MQ#FF-D	ZB38KCE	$13,170	$13,160	$13,780	$1,060	F / Large	F	5/8	7/8	1,250
HDSZ-0600MQ#FF-D	ZB48KCE	-	$13,660	$14,280	$1,060	F / Large	F	5/8	7/8	1,250
HDSZ-0600MQ#JH-D	ZB48KCE	-	$18,710	$19,450	$1,060	J / X-Large	H	5/8	7/8	1,575
HDSZ-0750MQ#FF-D	ZB58K5E	-	$15,920	$16,520	$1,910	F / Large	F	5/8	1-3/8	1,250
HDSZ-0750MQ#JH-D	ZB58K5E	-	$20,970	$21,700	$1,910	J / X-Large	H	5/8	1-3/8	1,575
HDSZ-1000MQ#FF-D	ZB76K5E	-	$18,160	$18,680	$1,910	F / Large	F	5/8	1-3/8	1,250
HDSZ-1000MQ#JH-D	ZB76K5E	-	$23,210	$23,850	$1,910	J / X-Large	H	5/8	1-3/8	1,575
HDSZ-1300MQ#JH-D	ZB95K5E	-	$23,100	$23,700	$2,270	J / X-Large	H	7/8	1-3/8	1,575
HDSZ-1500MQ#JH-A	ZB114K5E	-	$23,410	$23,810	$2,270	J / X-Large	H	7/8	1-3/8	1,575

UNIT MODEL	COMPRESSOR MODEL	LIST PRICE			4 YEAR EXTENDED COMPRESSOR WARRANTY	TECHNICAL SPECIFICATIONS				SHIP WGT (LB)
		208/1/60 D	208/3/60 K	460/3/60 M		CONDENSER AND CABINET SIZE	RCVR SIZE	CONNECTIONS (IN) LIQUID	CONNECTIONS (IN) SUCTION	
Scroll - Low Temperature R-407A										
HDSZ-0200LQ#AB-D	ZF06K4E	$7,300	$7,300	$7,730	$1,100	A / Small	B	1/2	7/8	400
HDSZ-0200LQ#BC-D	ZF06K4E	$8,660	$8,660	$9,090	$1,100	B / Medium	C	1/2	7/8	650
HDSZ-0250LQ#BC-D	ZF08K4E	$8,840	$8,840	$9,270	$1,100	B / Medium	C	1/2	7/8	650
HDSZ-0250LQ#DE-D	ZF08K4E	$10,810	$10,810	$11,300	$1,100	D / Medium	E	1/2	7/8	650
HDSZ-0300LQ#AB-D	ZF09K4E	$7,730	$7,720	$8,160	$1,100	A / Small	B	1/2	7/8	400
HDSZ-0300LQ#BC-D	ZF09K4E	$9,080	$9,080	$9,510	$1,100	B / Medium	C	1/2	7/8	650
HDSZ-0350LQ#BC-D	ZF11K4E	$8,640	$8,630	$9,070	$1,100	B / Medium	C	1/2	7/8	650
HDSZ-0350LQ#DE-D	ZF11K4E	$10,600	$10,600	$11,100	$1,100	D / Medium	E	1/2	7/8	650
HDSZ-0400LQ#BC-D	ZF13K4E	$8,930	$8,920	$9,360	$1,180	B / Medium	C	1/2	7/8	650
HDSZ-0400LQ#DE-D	ZF13K4E	$10,900	$10,890	$11,390	$1,180	D / Medium	E	1/2	7/8	650
HDSZ-0500LQ#BC-D	ZF15K4E	$9,320	$9,310	$9,740	$1,180	B / Medium	C	1/2	7/8	650
HDSZ-0500LQ#DE-D	ZF15K4E	$11,280	$11,280	$11,770	$1,180	D / Medium	E	1/2	7/8	650
HDSZ-0600LQ#BC-D	ZF18K4E	-	$9,400	$9,840	$1,180	B / Medium	C	5/8	7/8	650
HDSZ-0600LQ#DE-D	ZF18K4E	-	$11,370	$11,860	$1,180	D / Medium	E	5/8	7/8	650
HDSZ-0750LQ#DE-D	ZF25K4E	-	$14,420	$14,920	$1,700	D / Medium	E	5/8	1-3/8	650
HDSZ-0750LQ#FF-D	ZF25K4E	-	$17,630	$18,250	$1,700	F / Large	F	5/8	1-3/8	1,250
HDSZ-1000LQ#DE-A	ZF34K5E	-	$17,610	$18,060	$2,470	D / Medium	E	5/8	1-3/8	650
HDSZ-1000LQ#FF-D	ZF34K5E	-	$20,820	$21,390	$2,470	F / Large	F	5/8	1-3/8	1,250

- HE H-SERIES OPTIONS PAGE HAS STANDARD FEATURES AND BASIC OPTIONS LIST. USE H-SERIES SOFTWARE FOR ADDITIONAL CUSTOMIZATION.
- ORDERS MUST INCLUDE THE FULL MODEL NUMBER INCLUDING CONDENSER AND RECEIVER "HDSZ-0200MQKAB"
Standard options on HDSZ units include sealed liquid drier, pump down switch, time clock, and crating.

Prices, product availability, and specifications are subject to change without notice.

HIGH EFFICIENCY H-SERIES PRODUCT DESCRIPTION - CONDENSING UNITS

Version: August 2025

HDSZ - HIGH EFFICIENCY H-SERIES COPELAND SCROLL CONDENSING UNITS

UNIT MODEL	COMPRESSOR MODEL	LIST PRICE 208/1/60 D	LIST PRICE 208/3/60 K	LIST PRICE 460/3/60 M	4 YEAR EXTENDED COMPRESSOR WARRANTY	TECHNICAL SPECIFICATIONS CONDENSER AND CABINET SIZE	RCVR SIZE	CONNECTIONS (IN) LIQUID	CONNECTIONS (IN) SUCTION	SHIP WGT (LB)
Scroll - Medium Temperature R-449A										
HDSZ-0080MR#AB-A	ZB06KAE	$8,130	$8,080	-	$930	A / Small	B	1/2	7/8	400
HDSZ-0080MR#BC-A	ZB06KAE	$9,490	$9,440	-	$930	B / Medium	C	1/2	7/8	650
HDSZ-0100MR#AB-A	ZB07KAE	$8,210	$8,170	-	$930	A / Small	B	1/2	7/8	400
HDSZ-0100MR#BC-A	ZB07KAE	$9,570	$9,530	-	$930	B / Medium	C	1/2	7/8	650
HDSZ-0120MR#AB-A	ZB08KAE	$8,290	$8,250	-	$930	A / Small	B	1/2	7/8	400
HDSZ-0120MR#BC-A	ZB08KAE	$9,650	$9,610	-	$930	B / Medium	C	1/2	7/8	650
HDSZ-0130MR#AB-A	ZS09KAE	$8,490	$8,390	$8,830	$930	A / Small	B	1/2	7/8	400
HDSZ-0130MR#BC-A	ZS09KAE	$9,850	$9,750	$10,190	$930	B / Medium	C	1/2	7/8	650
HDSZ-0150MR#AB-A	ZS11KAE	$8,680	$8,570	$9,010	$930	A / Small	B	1/2	7/8	400
HDSZ-0150MR#BC-D	ZS11KAE	$10,040	$9,930	$10,370	$930	B / Medium	C	1/2	7/8	650
HDSZ-0180MR#AB-A	ZS13KAE	$8,680	$8,580	$9,010	$930	A / Small	B	1/2	7/8	400
HDSZ-0180MR#BC-D	ZS13KAE	$10,040	$9,940	$10,370	$930	B / Medium	C	1/2	7/8	650
HDSZ-0200MR#BC-D	ZB15KCE	$8,260	$8,260	$8,690	$930	B / Medium	C	1/2	7/8	650
HDSZ-0200MR#DE-D	ZB15KCE	$10,230	$10,220	$10,720	$930	D / Medium	E	1/2	7/8	650
HDSZ-0250MR#BC-D	ZB19KCE	-	$7,290	$7,730	$930	B / Medium	C	1/2	7/8	650
HDSZ-0250MR#DE-D	ZB19KCE	-	$9,260	$9,750	$930	D / Medium	E	1/2	7/8	650
HDSZ-0300MR#BC-D	ZB21KCE	$7,760	$7,750	$8,190	$930	B / Medium	C	1/2	7/8	650
HDSZ-0300MR#DE-D	ZB21KCE	$9,720	$9,720	$10,210	$930	D / Medium	E	1/2	7/8	650
HDSZ-0350MR#BC-D	ZB26KCE	$7,830	$7,820	$8,260	$930	B / Medium	C	1/2	7/8	650
HDSZ-0350MR#DE-D	ZB26KCE	$9,800	$9,790	$10,290	$930	D / Medium	E	1/2	7/8	650
HDSZ-0400MR#BC-D	ZB30KCE	$8,200	$8,190	$8,620	$1,060	B / Medium	C	5/8	7/8	650
HDSZ-0400MR#DE-D	ZB30KCE	$10,160	$10,160	$10,650	$1,060	D / Medium	E	5/8	7/8	650
HDSZ-0500MR#DE-D	ZB38KCE	$9,930	$9,920	$10,410	$1,060	D / Medium	E	5/8	7/8	650
HDSZ-0500MR#FF-D	ZB38KCE	$13,170	$13,160	$13,780	$1,060	F / Large	F	5/8	7/8	1,250
HDSZ-0600MR#FF-D	ZB48KCE	-	$13,660	$14,280	$1,060	F / Large	F	5/8	7/8	1,250
HDSZ-0600MR#JH-D	ZB48KCE	-	$18,710	$19,450	$1,060	J / X-Large	H	5/8	7/8	1,575
HDSZ-0750MR#FF-D	ZB58K5E	-	$15,920	$16,520	$1,910	F / Large	F	5/8	1-3/8	1,250
HDSZ-0750MR#JH-D	ZB58K5E	-	$20,970	$21,700	$1,910	J / X-Large	H	5/8	1-3/8	1,575
HDSZ-1000MR#FF-D	ZB76K5E	-	$18,160	$18,680	$1,910	F / Large	F	5/8	1-3/8	1,250
HDSZ-1000MR#JH-D	ZB76K5E	-	$23,210	$23,850	$1,910	J / X-Large	H	5/8	1-3/8	1,575
HDSZ-1300MR#JH-D	ZB95K5E	-	$23,100	$23,700	$2,270	J / X-Large	H	7/8	1-3/8	1,575
HDSZ-1500MR#JH-D	ZB114K5E	-	$23,410	$23,810	$2,270	J / X-Large	H	7/8	1-3/8	1,575

UNIT MODEL	COMPRESSOR MODEL	LIST PRICE 208/1/60 D	LIST PRICE 208/3/60 K	LIST PRICE 460/3/60 M	4 YEAR EXTENDED COMPRESSOR WARRANTY	TECHNICAL SPECIFICATIONS CONDENSER AND CABINET SIZE	RCVR SIZE	CONNECTIONS (IN) LIQUID	CONNECTIONS (IN) SUCTION	SHIP WGT (LBS)
Scroll - Low Temperature R-449A										
HDSZ-0200LR#AB-D	ZF06K4E	$7,300	$7,300	$7,730	$1,100	A / Small	B	1/2	7/8	400
HDSZ-0200LR#BC-D	ZF06K4E	$8,660	$8,660	$9,090	$1,100	B / Medium	C	1/2	7/8	650
HDSZ-0250LR#BC-D	ZF08K4E	$8,840	$8,840	$9,270	$1,100	B / Medium	C	1/2	7/8	650
HDSZ-0250LR#DE-D	ZF08K4E	$10,810	$10,810	$11,300	$1,100	D / Medium	E	1/2	7/8	650
HDSZ-0300LR#AB-D	ZF09K4E	$7,730	$7,720	$8,160	$1,100	A / Small	B	1/2	7/8	400
HDSZ-0300LR#BC-D	ZF09K4E	$9,080	$9,080	$9,510	$1,100	B / Medium	C	1/2	7/8	650
HDSZ-0350LR#BC-D	ZF11K4E	$8,640	$8,630	$9,070	$1,100	B / Medium	C	1/2	7/8	650
HDSZ-0350LR#DE-D	ZF11K4E	$10,600	$10,600	$11,100	$1,100	D / Medium	E	1/2	7/8	650
HDSZ-0400LR#BC-D	ZF13K4E	$8,930	$8,920	$9,360	$1,180	B / Medium	C	1/2	7/8	650
HDSZ-0400LR#DE-D	ZF13K4E	$10,900	$10,890	$11,390	$1,180	D / Medium	E	1/2	7/8	650
HDSZ-0500LR#BC-D	ZF15K4E	$9,320	$9,310	$9,740	$1,180	B / Medium	C	1/2	7/8	650
HDSZ-0500LR#DE-D	ZF15K4E	$11,280	$11,280	$11,770	$1,180	D / Medium	E	1/2	7/8	650
HDSZ-0600LR#BC-D	ZF18K4E	-	$9,400	$9,840	$1,180	B / Medium	C	5/8	7/8	650
HDSZ-0600LR#DE-D	ZF18K4E	-	$11,370	$11,860	$1,180	D / Medium	E	5/8	7/8	650
HDSZ-0750LR#DE-D	ZF25K4E	-	$14,420	$14,920	$1,700	D / Medium	E	5/8	1-3/8	650
HDSZ-0750LR#FF-D	ZF25K4E	-	$17,630	$18,250	$1,700	F / Large	F	5/8	1-3/8	1,250
HDSZ-1000LR#DE-D	ZF34K5E	-	$17,610	$18,060	$2,470	D / Medium	E	5/8	1-3/8	650
HDSZ-1000LR#FF-D	ZF34K5E	-	$20,820	$21,390	$2,470	F / Large	F	5/8	1-3/8	1,250

- HE H-SERIES OPTIONS PAGE HAS STANDARD FEATURES AND BASIC OPTIONS LIST. USE H-SERIES SOFTWARE FOR ADDITIONAL CUSTOMIZATION.
- ORDERS MUST INCLUDE THE FULL MODEL NUMBER INCLUDING CONDENSER AND RECEIVER "HDSZ-0200MRKAB"
Standard options on HDSZ units include sealed liquid drier, pump down switch, time clock, and crating.

Prices, product availability, and specifications are subject to change without notice.

HIGH EFFICIENCY H-SERIES PRODUCT DESCRIPTION - CONDENSING UNITS

Version: August 2025

HDSZ - HIGH EFFICIENCY H-SERIES COPELAND SCROLL CONDENSING UNITS

UNIT MODEL	COMPRESSOR MODEL	LIST PRICE 208/1/60 D	LIST PRICE 208/3/60 K	LIST PRICE 460/3/60 M	4 YEAR EXTENDED COMPRESSOR WARRANTY	TECHNICAL SPECIFICATIONS CONDENSER AND CABINET SIZE	RCVR SIZE	CONNECTIONS (IN) LIQUID	CONNECTIONS (IN) SUCTION	SHIP WGT (LB)
Scroll - Medium Temperature R-404A										
HDSZ-0080MS#AB-A	ZB06KAE	$8,130	$8,080	-	$930	A / Small	B	1/2	7/8	400
HDSZ-0080MS#BC-A	ZB06KAE	$9,490	$9,440	-	$930	B / Medium	C	1/2	7/8	650
HDSZ-0100MS#AB-A	ZB07KAE	$8,210	$8,170	-	$930	A / Small	B	1/2	7/8	400
HDSZ-0100MS#BC-D	ZB07KAE	$9,570	$9,530	-	$930	B / Medium	C	1/2	7/8	650
HDSZ-0120MS#AB-D	ZB08KAE	$8,290	$8,250	-	$930	A / Small	B	1/2	7/8	400
HDSZ-0120MS#BC-D	ZB08KAE	$9,650	$9,610	-	$930	B / Medium	C	1/2	7/8	650
HDSZ-0130MS#AB-D	ZS09KAE	$8,490	$8,390	$8,830	$930	A / Small	B	1/2	7/8	400
HDSZ-0130MS#BC-D	ZS09KAE	$9,850	$9,750	$10,190	$930	B / Medium	C	1/2	7/8	650
HDSZ-0150MS#AB-D	ZS11KAE	$8,680	$8,570	$9,010	$930	A / Small	B	1/2	7/8	400
HDSZ-0150MS#BC-D	ZS11KAE	$10,040	$9,930	$10,370	$930	B / Medium	C	1/2	7/8	650
HDSZ-0180MS#AB-D	ZS13KAE	$8,680	$8,580	$9,010	$930	A / Small	B	1/2	7/8	400
HDSZ-0180MS#BC-D	ZS13KAE	$10,040	$9,940	$10,370	$930	B / Medium	C	1/2	7/8	650
HDSZ-0200MS#BC-D	ZB15KCE	$8,260	$8,260	$8,690	$930	B / Medium	C	1/2	7/8	650
HDSZ-0200MS#DE-D	ZB15KCE	$10,230	$10,220	$10,720	$930	D / Medium	E	1/2	7/8	650
HDSZ-0250MS#BC-D	ZB19KCE	-	$7,290	$7,730	$930	B / Medium	C	1/2	7/8	650
HDSZ-0250MS#DE-D	ZB19KCE	-	$9,260	$9,750	$930	D / Medium	E	1/2	7/8	650
HDSZ-0300MS#BC-D	ZB21KCE	$7,760	$7,750	$8,190	$930	B / Medium	C	1/2	7/8	650
HDSZ-0300MS#DE-D	ZB21KCE	$9,720	$9,720	$10,210	$930	D / Medium	E	1/2	7/8	650
HDSZ-0350MS#BC-D	ZB26KCE	$7,830	$7,820	$8,260	$930	B / Medium	C	1/2	7/8	650
HDSZ-0350MS#DE-D	ZB26KCE	$9,800	$9,790	$10,290	$930	D / Medium	E	1/2	7/8	650
HDSZ-0400MS#BC-D	ZB30KCE	$8,200	$8,190	$8,620	$1,060	B / Medium	C	5/8	7/8	650
HDSZ-0400MS#DE-D	ZB30KCE	$10,160	$10,160	$10,650	$1,060	D / Medium	E	5/8	7/8	650
HDSZ-0500MS#DE-D	ZB38KCE	$9,960	$9,940	$10,440	$1,060	D / Medium	E	5/8	7/8	650
HDSZ-0500MS#FF-D	ZB38KCE	$13,170	$13,160	$13,780	$1,060	F / Large	F	5/8	7/8	1,250
HDSZ-0600MS#FF-D	ZB48KCE	-	$13,660	$14,280	$1,060	F / Large	F	5/8	7/8	1,250
HDSZ-0600MS#JH-D	ZB48KCE	-	$18,710	$19,450	$1,060	J / X-Large	H	5/8	7/8	1,575
HDSZ-0750MS#FF-D	ZB58K5E	-	$15,920	$16,520	$1,910	F / Large	F	5/8	1-3/8	1,250
HDSZ-0750MS#JH-D	ZB58K5E	-	$20,970	$21,700	$1,910	J / X-Large	H	5/8	1-3/8	1,575
HDSZ-1000MS#FF-D	ZB76K5E	-	$18,160	$18,680	$1,910	F / Large	F	5/8	1-3/8	1,250
HDSZ-1000MS#JH-D	ZB76K5E	-	$23,210	$23,850	$1,910	J / X-Large	H	5/8	1-3/8	1,575
HDSZ-1300MS#JH-D	ZB95K5E	-	$23,100	$23,700	$2,270	J / X-Large	H	7/8	1-3/8	1,575
HDSZ-1500MS#JH-D	ZB114K5E	-	$23,410	$23,810	$2,270	J / X-Large	H	7/8	1-3/8	1,575

UNIT MODEL	COMPRESSOR MODEL	LIST PRICE 208/1/60 D	LIST PRICE 208/3/60 K	LIST PRICE 460/3/60 M	4 YEAR EXTENDED COMPRESSOR WARRANTY	TECHNICAL SPECIFICATIONS CONDENSER AND CABINET SIZE	RCVR SIZE	CONNECTIONS (IN) LIQUID	CONNECTIONS (IN) SUCTION	SHIP WGT (LB)
Scroll - Low Temperature R-404A										
HDSZ-0200LS#AB-A	ZF06K4E	$7,300	$7,300	$7,730	$1,100	A / Small	B	1/2	7/8	400
HDSZ-0200LS#BC-D	ZF06K4E	$8,660	$8,660	$9,090	$1,100	B / Medium	C	1/2	7/8	650
HDSZ-0250LS#BC-D	ZF08K4E	$8,840	$8,840	$9,270	$1,100	B / Medium	C	1/2	7/8	650
HDSZ-0250LS#DE-D	ZF08K4E	$10,810	$10,810	$11,300	$1,100	D / Medium	E	1/2	7/8	650
HDSZ-0300LS#AB-D	ZF09K4E	$7,730	$7,720	$8,160	$1,100	A / Small	B	1/2	7/8	400
HDSZ-0300LS#BC-D	ZF09K4E	$9,080	$9,080	$9,510	$1,100	B / Medium	C	1/2	7/8	650
HDSZ-0350LS#BC-D	ZF11K4E	$8,640	$8,630	$9,070	$1,100	B / Medium	C	1/2	7/8	650
HDSZ-0350LS#DE-D	ZF11K4E	$10,600	$10,600	$11,100	$1,100	D / Medium	E	1/2	7/8	650
HDSZ-0400LS#BC-D	ZF13K4E	$8,930	$8,920	$9,360	$1,180	B / Medium	C	1/2	7/8	650
HDSZ-0400LS#DE-D	ZF13K4E	$10,900	$10,890	$11,390	$1,180	D / Medium	E	1/2	7/8	650
HDSZ-0500LS#BC-D	ZF15K4E	$9,320	$9,310	$9,740	$1,180	B / Medium	C	1/2	7/8	650
HDSZ-0500LS#DE-D	ZF15K4E	$11,280	$11,280	$11,770	$1,180	D / Medium	E	1/2	7/8	650
HDSZ-0600LS#BC-D	ZF18K4E	-	$9,400	$9,840	$1,180	B / Medium	C	5/8	7/8	650
HDSZ-0600LS#DE-D	ZF18K4E	-	$11,370	$11,860	$1,180	D / Medium	E	5/8	7/8	650
HDSZ-0750LS#DE-D	ZF25K4E	-	$14,420	$14,920	$1,700	D / Medium	E	5/8	1-3/8	650
HDSZ-0750LS#FF-D	ZF25K4E	-	$17,630	$18,250	$1,700	F / Large	F	5/8	1-3/8	1,250
HDSZ-1000LS#DE-D	ZF34K5E	-	$17,610	$18,060	$2,470	D / Medium	E	5/8	1-3/8	650
HDSZ-1000LS#FF-D	ZF34K5E	-	$20,850	$21,420	$2,470	F / Large	F	5/8	1-3/8	1,250

- HE H-SERIES OPTIONS PAGE HAS STANDARD FEATURES AND BASIC OPTIONS LIST. USE H-SERIES SOFTWARE FOR ADDITIONAL CUSTOMIZATION.
- ORDERS MUST INCLUDE THE FULL MODEL NUMBER INCLUDING CONDENSER AND RECEIVER "HDSZ-0200MSKAB"
Standard options on HDSZ units include sealed liquid drier, pump down switch, time clock, and crating.

Prices, product availability, and specifications are subject to change without notice.

HIGH EFFICIENCY H-SERIES PRODUCT DESCRIPTION - CONDENSING UNITS

Version: August 2025

HDSZ - HIGH EFFICIENCY H-SERIES COPELAND SCROLL CONDENSING UNITS

UNIT MODEL	COMPRESSOR MODEL	LIST PRICE			4 YEAR EXTENDED COMPRESSOR WARRANTY	TECHNICAL SPECIFICATIONS				SHIP WGT (LB)
		208/1/60 D	208/3/60 K	460/3/60 M		CONDENSER AND CABINET SIZE	RCVR SIZE	CONNECTIONS (IN) LIQUID	CONNECTIONS (IN) SUCTION	
Scroll - Medium Temperature R-448A										
HDSZ-0080MT#AB-A	ZB06KAE	$8,130	$8,080	-	$930	A / Small	B	1/2	7/8	400
HDSZ-0080MT#BC-A	ZB06KAE	$9,490	$9,440	-	$930	B / Medium	C	1/2	7/8	650
HDSZ-0100MT#AB-A	ZB07KAE	$8,210	$8,170	-	$930	A / Small	B	1/2	7/8	400
HDSZ-0100MT#BC-A	ZB07KAE	$9,570	$9,530	-	$930	B / Medium	C	1/2	7/8	650
HDSZ-0120MT#AB-A	ZB08KAE	$8,290	$8,250	-	$930	A / Small	B	1/2	7/8	400
HDSZ-0120MT#BC-A	ZB08KAE	$9,650	$9,610	-	$930	B / Medium	C	1/2	7/8	650
HDSZ-0130MT#AB-A	ZS09KAE	$8,490	$8,390	$8,830	$930	A / Small	B	1/2	7/8	400
HDSZ-0130MT#BC-A	ZS09KAE	$9,850	$9,750	$10,190	$930	B / Medium	C	1/2	7/8	650
HDSZ-0150MT#AB-A	ZS11KAE	$8,680	$8,570	$9,010	$930	A / Small	B	1/2	7/8	400
HDSZ-0150MT#BC-D	ZS11KAE	$10,040	$9,930	$10,370	$930	B / Medium	C	1/2	7/8	650
HDSZ-0180MT#AB-A	ZS13KAE	$8,680	$8,580	$9,010	$930	A / Small	B	1/2	7/8	400
HDSZ-0180MT#BC-D	ZS13KAE	$10,040	$9,940	$10,370	$930	B / Medium	C	1/2	7/8	650
HDSZ-0200MT#BC-D	ZB15KCE	$8,260	$8,260	$8,690	$930	B / Medium	C	1/2	7/8	650
HDSZ-0200MT#DE-D	ZB15KCE	$10,230	$10,220	$10,720	$930	D / Medium	E	1/2	7/8	650
HDSZ-0250MT#BC-D	ZB19KCE	-	$7,290	$7,730	$930	B / Medium	C	1/2	7/8	650
HDSZ-0300MT#BC-D	ZB21KCE	$7,760	$7,750	$8,190	$930	B / Medium	C	1/2	7/8	650
HDSZ-0300MT#DE-D	ZB21KCE	$9,720	$9,720	$10,210	$930	D / Medium	E	1/2	7/8	650
HDSZ-0350MT#BC-D	ZB26KCE	$7,830	$7,820	$8,260	$930	B / Medium	C	1/2	7/8	650
HDSZ-0350MT#DE-D	ZB26KCE	$9,800	$9,790	$10,290	$930	D / Medium	E	1/2	7/8	650
HDSZ-0400MT#BC-D	ZB30KCE	$8,200	$8,190	$8,620	$1,060	B / Medium	C	5/8	7/8	650
HDSZ-0400MT#DE-D	ZB30KCE	$10,160	$10,160	$10,650	$1,060	D / Medium	E	5/8	7/8	650
HDSZ-0500MT#DE-D	ZB38KCE	$9,930	$9,920	$10,410	$1,060	D / Medium	E	5/8	7/8	650
HDSZ-0500MT#FF-D	ZB38KCE	$13,170	$13,160	$13,780	$1,060	F / Large	F	5/8	7/8	1,250
HDSZ-0600MT#FF-D	ZB48KCE	-	$13,660	$14,280	$1,060	F / Large	F	5/8	7/8	1,250
HDSZ-0600MT#JH-D	ZB48KCE	-	$18,710	$19,450	$1,060	J / X-Large	H	5/8	7/8	1,575
HDSZ-0750MT#FF-D	ZB58K5E	-	$15,920	$16,520	$1,910	F / Large	F	5/8	1-3/8	1,250
HDSZ-0750MT#JH-D	ZB58K5E	-	$20,970	$21,700	$1,910	J / X-Large	H	5/8	1-3/8	1,575
HDSZ-1000MT#FF-D	ZB76K5E	-	$18,160	$18,680	$1,910	F / Large	F	5/8	1-3/8	1,250
HDSZ-1000MT#JH-D	ZB76K5E	-	$23,210	$23,850	$1,910	J / X-Large	H	5/8	1-3/8	1,575
HDSZ-1300MT#JH-D	ZB95K5E	-	$23,100	$23,700	$2,270	J / X-Large	H	7/8	1-3/8	1,575
HDSZ-1500MT#JH-D	ZB114K5E	-	$23,410	$23,810	$2,270	J / X-Large	H	7/8	1-3/8	1,575

UNIT MODEL	COMPRESSOR MODEL	LIST PRICE			4 YEAR EXTENDED COMPRESSOR WARRANTY	TECHNICAL SPECIFICATIONS				SHIP WGT (LB)
		208/1/60 D	208/3/60 K	460/3/60 M		CONDENSER AND CABINET SIZE	RCVR SIZE	CONNECTIONS (IN) LIQUID	CONNECTIONS (IN) SUCTION	
Scroll - Low Temperature R-448A										
HDSZ-0200LT#AB-D	ZF06K4E	$7,300	$7,300	$7,730	$1,100	A / Small	B	1/2	7/8	400
HDSZ-0200LT#BC-D	ZF06K4E	$8,660	$8,660	$9,090	$1,100	B / Medium	C	1/2	7/8	650
HDSZ-0250LT#BC-D	ZF08K4E	$8,840	$8,840	$9,270	$1,100	B / Medium	C	1/2	7/8	650
HDSZ-0250LT#DE-D	ZF08K4E	$10,810	$10,810	$11,300	$1,100	D / Medium	E	1/2	7/8	650
HDSZ-0300LT#AB-D	ZF09K4E	$7,730	$7,720	$8,160	$1,100	A / Small	B	1/2	7/8	400
HDSZ-0300LT#BC-D	ZF09K4E	$9,080	$9,080	$9,510	$1,100	B / Medium	C	1/2	7/8	650
HDSZ-0350LT#BC-D	ZF11K4E	$8,640	$8,630	$9,070	$1,100	B / Medium	C	1/2	7/8	650
HDSZ-0350LT#DE-D	ZF11K4E	$10,600	$10,600	$11,100	$1,100	D / Medium	E	1/2	7/8	650
HDSZ-0400LT#BC-D	ZF13K4E	$8,930	$8,920	$9,360	$1,180	B / Medium	C	1/2	7/8	650
HDSZ-0400LT#DE-D	ZF13K4E	$10,900	$10,890	$11,390	$1,180	D / Medium	E	1/2	7/8	650
HDSZ-0500LT#BC-D	ZF15K4E	$9,320	$9,310	$9,740	$1,180	B / Medium	C	1/2	7/8	650
HDSZ-0500LT#DE-D	ZF15K4E	$11,280	$11,280	$11,770	$1,180	D / Medium	E	1/2	7/8	650
HDSZ-0600LT#BC-D	ZF18K4E	-	$9,400	$9,840	$1,180	B / Medium	C	5/8	7/8	650
HDSZ-0600LT#DE-D	ZF18K4E	-	$11,370	$11,860	$1,180	D / Medium	E	5/8	7/8	650
HDSZ-0750LT#DE-D	ZF25K4E	-	$14,420	$14,920	$1,700	D / Medium	E	5/8	1-3/8	650
HDSZ-0750LT#FF-D	ZF25K4E	-	$17,630	$18,250	$1,700	F / Large	F	5/8	1-3/8	1,250
HDSZ-1000LT#DE-D	ZF34K5E	-	$17,610	$18,060	$2,470	D / Medium	E	5/8	1-3/8	650
HDSZ-1000LT#FF-D	ZF34K5E	-	$20,820	$21,390	$2,470	F / Large	F	5/8	1-3/8	1,250

- HE H-SERIES OPTIONS PAGE HAS STANDARD FEATURES AND BASIC OPTIONS LIST. USE H-SERIES SOFTWARE FOR ADDITIONAL CUSTOMIZATION.

- ORDERS MUST INCLUDE THE FULL MODEL NUMBER INCLUDING CONDENSER AND RECEIVER "HDSZ-0200MTKAB"

Standard options on HDSZ units include sealed liquid drier, pump down switch, time clock, and crating.

Prices, product availability, and specifications are subject to change without notice.

HIGH EFFICIENCY H-SERIES PRODUCT DESCRIPTION - CONDENSING UNITS

Version: August 2025

HDSS - HIGH EFFICIENCY H-SERIES COPELAND SEMI-HERMETIC CONDENSING UNITS

UNIT MODEL	COMPRESSOR MODEL	LIST PRICE 208/1/60 D	LIST PRICE 208/3/60 K	LIST PRICE 460/3/60 M	4 YEAR EXTENDED COMPRESSOR WARRANTY	TECHNICAL SPECIFICATIONS CONDENSER AND CABINET SIZE	TECHNICAL SPECIFICATIONS RCVR SIZE	TECHNICAL SPECIFICATIONS CONNECTIONS (IN) LIQUID	TECHNICAL SPECIFICATIONS CONNECTIONS (IN) SUCTION	SHIP WGT (LB)
Semi-Hermetic - Low Temperature R-507A										
HDSS-0050LP#AB-D	KAN#-006E	-	$6,520	-	$710	A / Small	B	1/2	7/8	400
HDSS-0050LP#AB-D	KAN#-005E	$6,520	-	-	$710	A / Small	B	1/2	7/8	400
HDSS-0050LP#BC-A	KAN#-006E	-	$7,880	-	$710	B / Medium	C	1/2	7/8	650
HDSS-0050LP#BC-A	KAN#-005E	$7,880	-	-	$710	B / Medium	C	1/2	7/8	650
HDSS-0070LP#AB-D	KAM#-007E	$6,750	$6,750	-	$710	A / Small	B	1/2	7/8	400
HDSS-0070LP#BC-D	KAM#-007E	$8,100	$8,110	-	$710	B / Medium	C	1/2	7/8	650
HDSS-0100LP#AB-D	KAJ#-011E	-	$6,760	$7,200	$710	A / Small	B	1/2	7/8	400
HDSS-0100LP#BC-D	KAJ#-011E	-	$8,120	$8,560	$710	B / Medium	C	1/2	7/8	650
HDSS-0150LP#BC-D	KAL#-015E	$9,000	$9,000	$9,440	$810	B / Medium	C	1/2	7/8	650
HDSS-0200LP#AB-D	EAV#-021E	$8,360	$8,350	$8,790	$1,410	A / Small	B	1/2	7/8	400
HDSS-0200LP#BC-A	EAV#-021E	$9,720	$9,710	$10,150	$1,410	B / Medium	C	1/2	7/8	650

- HE H-SERIES OPTIONS PAGE HAS STANDARD FEATURES AND BASIC OPTIONS LIST. USE H-SERIES SOFTWARE FOR ADDITIONAL CUSTOMIZATION.
- ORDERS MUST INCLUDE THE FULL MODEL NUMBER INCLUDING CONDENSER AND RECEIVER "HDSS-0070LSKAB"
Standard options on HDSS units include sealed liquid drier, pump down switch, time clock, and crating.

Prices, product availability, and specifications are subject to change without notice.

HIGH EFFICIENCY H-SERIES PRODUCT DESCRIPTION - CONDENSING UNITS

Version: August 2025

HDSS - HIGH EFFICIENCY H-SERIES COPELAND SEMI-HERMETIC CONDENSING UNITS

UNIT MODEL	COMPRESSOR MODEL	LIST PRICE			4 YEAR EXTENDED COMPRESSOR WARRANTY	TECHNICAL SPECIFICATIONS				SHIP WGT (LB)
		208/1/60 D	208/3/60 K	460/3/60 M		CONDENSER AND CABINET SIZE	RCVR SIZE	CONNECTIONS (IN) LIQUID	CONNECTIONS (IN) SUCTION	
Semi-Hermetic - Medium Temperature R-449A										
HDSS-0072MR#BC-A	KAN#-007E	$8,210	$8,110	-	$710	B / Medium	C	1/2	5/8	650
HDSS-0100MR#BC-A	KAR#-010E	$8,190	$8,210	$8,630	$710	B / Medium	C	1/2	7/8	650
HDSS-0200MR#BC-D	KAK#-020E	$8,570	$8,570	-	$810	B / Medium	C	1/2	7/8	650
HDSS-0201MR#BC-A	ERC#-021E	-	$8,850	$9,290	$1,410	B / Medium	C	1/2	7/8	650
HDSS-0300MR#DE-A	ERF#-031E	-	$10,910	$11,400	$1,410	D / Medium	E	1/2	1-1/8	650

UNIT MODEL	COMPRESSOR MODEL	LIST PRICE			4 YEAR EXTENDED COMPRESSOR WARRANTY	TECHNICAL SPECIFICATIONS				SHIP WGT (LBS)
		208/1/60 D	208/3/60 K	460/3/60 M		CONDENSER AND CABINET SIZE	RCVR SIZE	CONNECTIONS (IN) LIQUID	CONNECTIONS (IN) SUCTION	
Semi-Hermetic - Low Temperature R-449A										
HDSS-0050LR#AB-A	KAN#-005E	$6,520	-	-	$710	A / Small	B	1/2	7/8	400
HDSS-0050LR#BC-A	KAN#-005E	$7,880	-	-	$710	B / Medium	C	1/2	7/8	650
HDSS-0070LR#AB-A	KAM#-007E	$6,750	$6,750	-	$710	A / Small	B	1/2	7/8	400
HDSS-0070LR#BC-A	KAM#-007E	$8,100	$8,110	-	$710	B / Medium	C	1/2	7/8	650
HDSS-0100LR#AB-A	KAJ#-011E	-	$6,760	$7,200	$710	A / Small	B	1/2	7/8	400
HDSS-0100LR#BC-A	KAJ#-011E	-	$8,120	$8,560	$710	B / Medium	C	1/2	7/8	650
HDSS-0150LR#BC-A	KAL#-015E	$9,000	$9,000	$9,440	$810	B / Medium	C	1/2	7/8	650
HDSS-0200LR#AB-D	EAV#-021E	$8,360	$8,350	$8,790	$1,410	A / Small	B	1/2	7/8	400
HDSS-0200LR#BC-D	EAV#-021E	$9,720	$9,710	$10,150	$1,410	B / Medium	C	1/2	7/8	650
HDSS-0250LR#BC-D	LAH#-032E	$9,840	$9,830	$10,270	$1,630	B / Medium	C	1/2	1-1/8	650
HDSS-0250LR#DE-D	LAH#-032E	$11,800	$11,800	$12,290	$1,630	D / Medium	E	1/2	1-1/8	650

- HE H-SERIES OPTIONS PAGE HAS STANDARD FEATURES AND BASIC OPTIONS LIST. USE H-SERIES SOFTWARE FOR ADDITIONAL CUSTOMIZATION.
- ORDERS MUST INCLUDE THE FULL MODEL NUMBER INCLUDING CONDENSER AND RECEIVER "HDSS-0070LSKAB"
Standard options on HDSS units include sealed liquid drier, pump down switch, time clock, and crating.

Prices, product availability, and specifications are subject to change without notice.

HIGH EFFICIENCY H-SERIES PRODUCT DESCRIPTION - CONDENSING UNITS

Version: August 2025

HDSS - HIGH EFFICIENCY H-SERIES COPELAND SEMI-HERMETIC CONDENSING UNITS

UNIT MODEL	COMPRESSOR MODEL	LIST PRICE			4 YEAR EXTENDED COMPRESSOR WARRANTY	TECHNICAL SPECIFICATIONS				SHIP WGT (LB)
		208/1/60 D	208/3/60 K	460/3/60 M		CONDENSER AND CABINET SIZE	RCVR SIZE	CONNECTIONS (IN) LIQUID	CONNECTIONS (IN) SUCTION	
Semi-Hermetic - Medium Temperature R-404A										
HDSS-0072MS#BC-A	KAN#-007E	$8,210	$8,110	-	$710	B / Medium	C	1/2	5/8	650
HDSS-0100MS#BC-A	KAR#-010E	$8,190	$8,210	NOTE 1	$710	B / Medium	C	1/2	7/8	650
HDSS-0200MS#BC-D	KAK#-020E	$8,570	$8,570	-	$810	B / Medium	C	1/2	7/8	650
HDSS-0201MS#BC-D	ERC#-021E	-	$8,850	$9,290	$1,410	B / Medium	C	1/2	7/8	650
HDSS-0300MS#DE-D	ERF#-031E	-	$10,910	$11,400	$1,410	D / Medium	E	1/2	1-1/8	650

UNIT MODEL	COMPRESSOR MODEL	LIST PRICE			4 YEAR EXTENDED COMPRESSOR WARRANTY	TECHNICAL SPECIFICATIONS				SHIP WGT (LB)
		208/1/60 D	208/3/60 K	460/3/60 M		CONDENSER AND CABINET SIZE	RCVR SIZE	CONNECTIONS (IN) LIQUID	CONNECTIONS (IN) SUCTION	
Semi-Hermetic - Low Temperature R-404A										
HDSS-0050LS#AB-A	KAN#-006E	-	$6,520	-	$710	A / Small	B	1/2	7/8	400
HDSS-0050LS#AB-A	KAN#-005E	$6,520	-	-	$710	A / Small	B	1/2	7/8	400
HDSS-0050LS#BC-A	KAN#-006E	-	$7,880	-	$710	B / Medium	C	1/2	7/8	650
HDSS-0050LS#BC-A	KAN#-005E	$7,880	-	-	$710	B / Medium	C	1/2	7/8	650
HDSS-0070LS#AB-D	KAM#-007E	$6,750	$6,750	-	$710	A / Small	B	1/2	7/8	400
HDSS-0070LS#BC-D	KAM#-007E	$8,100	$8,110	-	$710	B / Medium	C	1/2	7/8	650
HDSS-0100LS#AB-D	KAJ#-011E	-	$6,760	$7,200	$710	A / Small	B	1/2	7/8	400
HDSS-0100LS#BC-D	KAJ#-011E	-	$8,120	$8,560	$710	B / Medium	C	1/2	7/8	650
HDSS-0150LS#BC-D	KAL#-015E	$9,000	$9,000	$9,440	$810	B / Medium	C	1/2	7/8	650
HDSS-0200LS#AB-D	EAV#-021E	NOTE 1	$8,350	$8,790	$1,410	A / Small	B	1/2	7/8	400
HDSS-0200LS#BC-D	EAV#-021E	NOTE 1	$9,710	$10,150	$1,410	B / Medium	C	1/2	7/8	650
HDSS-0250LS#BC-D	LAH#-032E	$9,840	$9,830	$10,270	$1,630	B / Medium	C	1/2	1-1/8	650
HDSS-0250LS#DE-D	LAH#-032E	$11,800	$11,800	$12,290	$1,630	D / Medium	E	1/2	1-1/8	650

- HE H-SERIES OPTIONS PAGE HAS STANDARD FEATURES AND BASIC OPTIONS LIST. USE H-SERIES SOFTWARE FOR ADDITIONAL CUSTOMIZATION.
- ORDERS MUST INCLUDE THE FULL MODEL NUMBER INCLUDING CONDENSER AND RECEIVER "HDSS-0070LSK*AB*"
Standard options on HDSS units include sealed liquid drier, pump down switch, time clock, and crating.

NOTE 1 : CONTACT AN APPLICATION OR SALES ENGINEER FOR PRICING.

Prices, product availability, and specifications are subject to change without notice.

HIGH EFFICIENCY H-SERIES PRODUCT DESCRIPTION - CONDENSING UNITS

Version: August 2025

HDSS - HIGH EFFICIENCY H-SERIES COPELAND SEMI-HERMETIC CONDENSING UNITS

UNIT MODEL	COMPRESSOR MODEL	LIST PRICE			4 YEAR EXTENDED COMPRESSOR WARRANTY	TECHNICAL SPECIFICATIONS				SHIP WGT (LB)
		208/1/60 D	208/3/60 K	460/3/60 M		CONDENSER AND CABINET SIZE	RCVR SIZE	CONNECTIONS (IN) LIQUID	CONNECTIONS (IN) SUCTION	
Semi-Hermetic - Medium Temperature - R-448A										
HDSS-0072MT#BC-A	KAN#-007E	$8,210	$8,110	-	$710	B / Medium	C	1/2	5/8	650
HDSS-0100MT#BC-A	KAR#-010E	$8,190	$8,210	$8,630	$710	B / Medium	C	1/2	7/8	650
HDSS-0200MT#BC-D	KAK#-020E	$8,570	$8,570	-	$810	B / Medium	C	1/2	7/8	650
HDSS-0201MT#BC-A	ERC#-021E	-	$8,850	$9,290	$1,410	B / Medium	C	1/2	7/8	650
HDSS-0300MT#DE-A	ERF#-031E	-	$10,910	$11,400	$1,410	D / Medium	E	1/2	1-1/8	650

UNIT MODEL	COMPRESSOR MODEL	LIST PRICE			4 YEAR EXTENDED COMPRESSOR WARRANTY	TECHNICAL SPECIFICATIONS				SHIP WGT (LB)
		208/1/60 D	208/3/60 K	460/3/60 M		CONDENSER AND CABINET SIZE	RCVR SIZE	CONNECTIONS (IN) LIQUID	CONNECTIONS (IN) SUCTION	
Semi-Hermetic - Low Temperature R-448A										
HDSS-0050LT#AB-A	KAN#-005E	$6,520	-	-	$710	A / Small	B	1/2	7/8	400
HDSS-0050LT#BC-A	KAN#-005E	$7,880	-	-	$710	B / Medium	C	1/2	7/8	650
HDSS-0070LT#AB-A	KAM#-007E	$6,750	$6,750	-	$710	A / Small	B	1/2	7/8	400
HDSS-0070LT#BC-A	KAM#-007E	$8,100	$8,110	-	$710	B / Medium	C	1/2	7/8	650
HDSS-0100LT#AB-A	KAJ#-011E	-	$6,760	$7,200	$710	A / Small	B	1/2	7/8	400
HDSS-0100LT#BC-A	KAJ#-011E	-	$8,120	$8,560	$710	B / Medium	C	1/2	7/8	650
HDSS-0150LT#BC-A	KAL#-015E	$9,000	$9,000	$9,440	$810	B / Medium	C	1/2	7/8	650
HDSS-0200LT#AB-D	EAV#-021E	$8,360	SEE NOTE 1	SEE NOTE 1	$1,410	A / Small	B	1/2	7/8	400
HDSS-0200LT#BC-D	EAV#-021E	SEE NOTE 1	$9,710	$10,150	$1,410	B / Medium	C	1/2	7/8	650
HDSS-0250LT#BC-D	LAH#-032E	$9,840	$9,830	$10,270	$1,630	B / Medium	C	1/2	1-1/8	650
HDSS-0250LT#DE-D	LAH#-032E	$11,800	$11,800	$12,290	$1,630	D / Medium	E	1/2	1-1/8	650

- HE H-SERIES OPTIONS PAGE HAS STANDARD FEATURES AND BASIC OPTIONS LIST. USE H-SERIES SOFTWARE FOR ADDITIONAL CUSTOMIZATION.
- ORDERS MUST INCLUDE THE FULL MODEL NUMBER INCLUDING CONDENSER AND RECEIVER "HDSS-0070LSKAB"
Standard options on HDSS units include sealed liquid drier, pump down switch, time clock, and crating.

NOTE 1 : CONTACT AN APPLICATION OR SALES ENGINEER FOR PRICING.

Prices, product availability, and specifications are subject to change without notice.

HIGH EFFICIENCY H-SERIES PRODUCT DESCRIPTION - CONDENSING UNITS

Version: August 2025

HDSD - HIGH EFFICIENCY H-SERIES COPELAND DISCUS CONDENSING UNITS

UNIT MODEL	COMPRESSOR MODEL	LIST PRICE		4 YEAR EXTENDED COMPRESSOR WARRANTY	TECHNICAL SPECIFICATIONS				SHIP WGT (LB)
		208/3/60 K	460/3/60 M		CONDENSER AND CABINET SIZE	RCVR SIZE	CONNECTIONS (IN) LIQUID	CONNECTIONS (IN) SUCTION	
Discus - Medium Temperature R-507A									
HDSD-0500MP#BC-D	2DC3R53KE	$12,870	$13,310	$2,120	B / Medium	C	1/2	1-3/8	650
HDSD-0500MP#DE-D	2DC3R53KE	$14,840	$15,330	$2,120	D / Medium	E	1/2	1-3/8	650
HDSD-0501MP#DE-D	2DD3R63KE	$14,940	$15,430	$2,120	D / Medium	E	5/8	1-3/8	650
HDSD-0501MP#FF-D	2DD3R63KE	$18,150	$18,770	$2,120	F / Large	F	5/8	1-3/8	1,250
HDSD-0750MP#FF-D	2DL3R78KE	$19,000	$19,610	$2,120	F / Large	F	5/8	1-3/8	1,250
HDSD-0750MP#JH-D	2DL3R78KE	$24,060	$24,790	$2,120	J / X-Large	H	5/8	1-3/8	1,575
HDSD-0751MP#FF-D	2DA3R89KE	$18,370	$18,980	$2,120	F / Large	F	5/8	1-3/8	1,250
HDSD-0751MP#JH-D	2DA3R89KE	$23,420	$24,150	$2,120	J / X-Large	H	5/8	1-3/8	1,575
HDSD-0752MP#FF-D	3DA3R10ME	$19,020	$19,530	$2,650	F / Large	F	5/8	1-3/8	1,250
HDSD-0752MP#JH-D	3DA3R10ME	$24,070	$24,710	$2,650	J / X-Large	H	5/8	1-3/8	1,575
HDSD-1000MP#FF-D	3DB3R12ME	$19,980	$20,500	$2,650	F / Large	F	7/8	1-3/8	1,250
HDSD-1000MP#JH-D	3DB3R12ME	$25,030	$25,670	$2,650	J / X-Large	H	7/8	1-3/8	1,575
HDSD-1200MP#JH-D	3DF3R15ME	$24,170	$24,800	$2,650	J / X-Large	H	7/8	1-3/8	1,575
HDSD-1500MP#JH-D	3DS3R17ME	$24,270	$24,830	$2,650	J / X-Large	H	7/8	1-5/8	1,575

UNIT MODEL	COMPRESSOR MODEL	LIST PRICE		4 YEAR EXTENDED COMPRESSOR WARRANTY	TECHNICAL SPECIFICATIONS				SHIP WGT (LBS)
		208/3/60 K	460/3/60 M		CONDENSER AND CABINET SIZE	RCVR SIZE	CONNECTIONS (IN) LIQUID	CONNECTIONS (IN) SUCTION	
Discus - Low Temperature R-507A									
HDSD-0300LP#BC-D	2DF3F16KE	$12,770	$13,200	$2,120	B / Medium	C	1/2	1-3/8	650
HDSD-0300LP#DE-D	2DF3F16KE	$14,740	$15,230	$2,120	D / Medium	E	1/2	1-3/8	650
HDSD-0400LP#BC-D	2DL3F20KE	$13,160	$13,590	$2,120	B / Medium	C	5/8	1-3/8	650
HDSD-0400LP#DE-D	2DL3F20KE	$15,120	$15,620	$2,120	D / Medium	E	5/8	1-3/8	650
HDSD-0600LP#BC-D	2DB3F25KE	$13,700	$14,130	$2,120	B / Medium	C	5/8	1-3/8	650
HDSD-0600LP#DE-D	2DB3F25KE	$15,670	$16,160	$2,120	D / Medium	E	5/8	1-3/8	650
HDSD-0601LP#BC-D	3DA3F28KE	$13,810	$14,250	$2,650	B / Medium	C	5/8	1-3/8	650
HDSD-0601LP#DE-D	3DA3F28KE	$15,780	$16,280	$2,650	D / Medium	E	5/8	1-3/8	650
HDSD-0750LP#DE-D	3DB3F33KE	$15,880	$16,360	$2,650	D / Medium	E	5/8	1-3/8	650
HDSD-0750LP#FF-D	3DB3F33KE	$19,090	$19,700	$2,650	F / Large	F	5/8	1-3/8	1,250
HDSD-0900LP#FF-D	3DF3F40KE	$19,770	$20,340	$2,650	F / Large	F	5/8	1-3/8	1,250
HDSD-0900LP#JH-D	3DF3F40KE	$24,820	$25,520	$2,650	J / X-Large	H	5/8	1-3/8	1,575
HDSD-1000LP#FF-D	3DS3F46KE	$21,030	$21,540	$2,650	F / Large	F	5/8	1-3/8	1,250
HDSD-1000LP#JH-D	3DS3F46KE	$26,080	$26,720	$2,650	J / X-Large	H	5/8	1-3/8	1,575
HDSD-1500LP#JH-D	4DHNF63KE	$27,610	$28,220	$3,840	J / X-Large	H	7/8	1-5/8	1,575
HDSD-2200LP#FF-A	4DJNF76KE	$23,040	$23,320	$3,840	F / Large	F	7/8	2-1/8	1,250
HDSD-2200LP#JH-D	4DJNF76KE	$28,090	$28,500	$3,840	J / X-Large	H	7/8	2-1/8	1,575

- HE H-SERIES OPTIONS PAGE HAS STANDARD FEATURES AND BASIC OPTIONS LIST. USE H-SERIES SOFTWARE FOR ADDITIONAL CUSTOMIZATION.

- ORDERS MUST INCLUDE THE FULL MODEL NUMBER "HDSD-0500MPKBD-D"

HDSD options include sealed liquid drier, pump down switch, time clock, solid mounted compressor, and crating.

Prices, product availability, and specifications are subject to change without notice.

HIGH EFFICIENCY H-SERIES PRODUCT DESCRIPTION - CONDENSING UNITS

Version: August 2025

HDSD - HIGH EFFICIENCY H-SERIES COPELAND DISCUS CONDENSING UNITS

UNIT MODEL	COMPRESSOR MODEL	LIST PRICE 208/3/60 K	LIST PRICE 460/3/60 M	4 YEAR EXTENDED COMPRESSOR WARRANTY	TECHNICAL SPECIFICATIONS CONDENSER AND CABINET SIZE	RCVR SIZE	CONNECTIONS (IN) LIQUID	CONNECTIONS (IN) SUCTION	SHIP WGT (LB)
Discus - Medium Temperature R-407F									
HDSD-0500MF#BC-D	2DC3R53KE	$12,870	$13,310	$2,120	B / Medium	C	1/2	1-3/8	650
HDSD-0500MF#DE-D	2DC3R53KE	$14,840	$15,330	$2,120	D / Medium	E	1/2	1-3/8	650
HDSD-0501MF#DE-D	2DD3R63KE	$14,910	$15,400	$2,120	D / Medium	E	5/8	1-3/8	650
HDSD-0501MF#FF-D	2DD3R63KE	$18,150	$18,770	$2,120	F / Large	F	5/8	1-3/8	1,250
HDSD-0750MF#FF-D	2DL3R78KE	$19,000	$19,610	$2,120	F / Large	F	5/8	1-3/8	1,250
HDSD-0750MF#JH-D	2DL3R78KE	$24,060	$24,790	$2,120	J / X-Large	H	5/8	1-3/8	1,575
HDSD-0751MF#FF-D	2DA3R89KE	$18,370	$18,980	$2,120	F / Large	F	5/8	1-3/8	1,250
HDSD-0751MF#JH-D	2DA3R89KE	$23,420	$24,150	$2,120	J / X-Large	H	5/8	1-3/8	1,575
HDSD-0752MF#FF-D	3DA3R10ME	$18,970	$19,480	$2,650	F / Large	F	5/8	1-3/8	1,250
HDSD-0752MF#JH-D	3DA3R10ME	$24,020	$24,660	$2,650	J / X-Large	H	5/8	1-3/8	1,575
HDSD-1000MF#FF-D	3DB3R12ME	$19,930	$20,450	$2,650	F / Large	F	7/8	1-3/8	1,250
HDSD-1000MF#JH-D	3DB3R12ME	$25,030	$25,670	$2,650	J / X-Large	H	7/8	1-3/8	1,575
HDSD-1200MF#JH-D	3DF3R15ME	$24,170	$24,800	$2,650	J / X-Large	H	7/8	1-3/8	1,575
HDSD-1500MF#JH-D	3DS3R17ME	$24,270	$24,830	$2,650	J / X-Large	H	7/8	1-5/8	1,575

UNIT MODEL	COMPRESSOR MODEL	LIST PRICE 208/3/60 K	LIST PRICE 460/3/60 M	4 YEAR EXTENDED COMPRESSOR WARRANTY	TECHNICAL SPECIFICATIONS CONDENSER AND CABINET SIZE	RCVR SIZE	CONNECTIONS (IN) LIQUID	CONNECTIONS (IN) SUCTION	SHIP WGT (LBS)
Discus - Low Temperature - INCLUDES DEMAND COOLING REQUIRED FOR R-407F									
HDSD-0300LF#BC-D	2DF3F16KE	$14,230	$14,660	$2,120	B / Medium	C	1/2	1-3/8	650
HDSD-0300LF#DE-D	2DF3F16KE	$16,200	$16,690	$2,120	D / Medium	E	1/2	1-3/8	650
HDSD-0400LF#BC-D	2DL3F20KE	$14,620	$15,050	$2,120	B / Medium	C	5/8	1-3/8	650
HDSD-0400LF#DE-D	2DL3F20KE	$16,580	$17,080	$2,120	D / Medium	E	5/8	1-3/8	650
HDSD-0600LF#BC-D	2DB3F25KE	$15,160	$15,590	$2,120	B / Medium	C	5/8	1-3/8	650
HDSD-0600LF#DE-D	2DB3F25KE	$17,130	$17,620	$2,120	D / Medium	E	5/8	1-3/8	650
HDSD-0601LF#BC-D	3DA3F28KE	$15,280	$15,710	$2,650	B / Medium	C	5/8	1-3/8	650
HDSD-0601LF#DE-D	3DA3F28KE	$17,240	$17,740	$2,650	D / Medium	E	5/8	1-3/8	650
HDSD-0750LF#DE-D	3DB3F33KE	$17,310	$17,800	$2,650	D / Medium	E	5/8	1-3/8	650
HDSD-0750LF#FF-D	3DB3F33KE	$20,530	$21,130	$2,650	F / Large	F	5/8	1-3/8	1,250
HDSD-0900LF#FF-D	3DF3F40KE	$21,230	$21,800	$2,650	F / Large	F	5/8	1-3/8	1,250
HDSD-0900LF#JH-D	3DF3F40KE	$26,280	$26,980	$2,650	J / X-Large	H	5/8	1-3/8	1,575
HDSD-1000LF#FF-D	3DS3F46KE	$22,490	$23,000	$2,650	F / Large	F	5/8	1-3/8	1,250
HDSD-1000LF#JH-D	3DS3F46KE	$27,540	$28,180	$2,650	J / X-Large	H	5/8	1-3/8	1,575
HDSD-1500LF#JH-D	4DHNF63KE	$28,970	$29,580	$3,840	J / X-Large	H	7/8	1-5/8	1,575
HDSD-2200LF#FF-A	4DJNF76KE	$24,400	$24,680	$3,840	F / Large	F	7/8	2-1/8	1,250
HDSD-2200LF#JH-A	4DJNF76KE	$29,450	$29,860	$3,840	J / X-Large	H	7/8	2-1/8	1,575

- HE H-SERIES OPTIONS PAGE HAS STANDARD FEATURES AND BASIC OPTIONS LIST. USE H-SERIES SOFTWARE FOR ADDITIONAL CUSTOMIZATION.
- ORDERS MUST INCLUDE THE FULL MODEL NUMBER "HDSD-0500MFKBD-D"
HDSD options include sealed liquid drier, pump down switch, time clock, solid mounted compressor, and crating.

Prices, product availability, and specifications are subject to change without notice.

HIGH EFFICIENCY H-SERIES PRODUCT DESCRIPTION - CONDENSING UNITS

Version: August 2025

HDSD - HIGH EFFICIENCY H-SERIES COPELAND DISCUS CONDENSING UNITS

UNIT MODEL	COMPRESSOR MODEL	LIST PRICE 208/3/60 K	LIST PRICE 460/3/60 M	4 YEAR EXTENDED COMPRESSOR WARRANTY	TECHNICAL SPECIFICATIONS CONDENSER AND CABINET SIZE	RCVR SIZE	CONNECTIONS (IN) LIQUID	CONNECTIONS (IN) SUCTION	SHIP WGT (LB)
Discus - Medium Temperature R-407A									
HDSD-0500MQ#BC-D	2DC3R53KE	$12,870	$13,310	$2,120	B / Medium	C	1/2	1-3/8	650
HDSD-0500MQ#DE-D	2DC3R53KE	$14,840	$15,330	$2,120	D / Medium	E	1/2	1-3/8	650
HDSD-0501MQ#DE-D	2DD3R63KE	$14,940	$15,430	$2,120	D / Medium	E	5/8	1-3/8	650
HDSD-0501MQ#FF-D	2DD3R63KE	$18,150	$18,770	$2,120	F / Large	F	5/8	1-3/8	1,250
HDSD-0750MQ#FF-D	2DL3R78KE	$19,000	$19,610	$2,120	F / Large	F	5/8	1-3/8	1,250
HDSD-0750MQ#JH-D	2DL3R78KE	$24,060	$24,790	$2,120	J / X-Large	H	5/8	1-3/8	1,575
HDSD-0751MQ#FF-D	2DA3R89KE	$18,370	$18,980	$2,120	F / Large	F	5/8	1-3/8	1,250
HDSD-0751MQ#JH-D	2DA3R89KE	$23,420	$24,150	$2,120	J / X-Large	H	5/8	1-3/8	1,575
HDSD-0752MQ#FF-D	3DA3R10ME	$19,020	$19,530	$2,650	F / Large	F	5/8	1-3/8	1,250
HDSD-0752MQ#JH-D	3DA3R10ME	$24,070	$24,710	$2,650	J / X-Large	H	5/8	1-3/8	1,575
HDSD-1000MQ#FF-D	3DB3R12ME	$19,980	$20,500	$2,650	F / Large	F	7/8	1-3/8	1,250
HDSD-1000MQ#JH-D	3DB3R12ME	$25,030	$25,670	$2,650	J / X-Large	H	7/8	1-3/8	1,575
HDSD-1200MQ#JH-D	3DF3R15ME	$24,170	$24,800	$2,650	J / X-Large	H	7/8	1-3/8	1,575
HDSD-1500MQ#JH-D	3DS3R17ME	$24,270	$24,830	$2,650	J / X-Large	H	7/8	1-5/8	1,575

UNIT MODEL	COMPRESSOR MODEL	LIST PRICE 208/3/60 K	LIST PRICE 460/3/60 M	4 YEAR EXTENDED COMPRESSOR WARRANTY	TECHNICAL SPECIFICATIONS CONDENSER AND CABINET SIZE	RCVR SIZE	CONNECTIONS (IN) LIQUID	CONNECTIONS (IN) SUCTION	SHIP WGT (LBS)
Discus - Low Temperature - INCLUDES DEMAND COOLING REQUIRED FOR R-407A									
HDSD-0300LQ#BC-D	2DF3F16KE	$14,230	$14,660	$2,120	B / Medium	C	1/2	1-3/8	650
HDSD-0300LQ#DE-D	2DF3F16KE	$16,200	$16,690	$2,120	D / Medium	E	1/2	1-3/8	650
HDSD-0400LQ#BC-D	2DL3F20KE	$14,620	$15,050	$2,120	B / Medium	C	5/8	1-3/8	650
HDSD-0400LQ#DE-D	2DL3F20KE	$16,580	$17,080	$2,120	D / Medium	E	5/8	1-3/8	650
HDSD-0600LQ#BC-D	2DB3F25KE	$15,160	$15,590	$2,120	B / Medium	C	5/8	1-3/8	650
HDSD-0600LQ#DE-D	2DB3F25KE	$17,130	$17,620	$2,120	D / Medium	E	5/8	1-3/8	650
HDSD-0601LQ#BC-D	3DA3F28KE	$15,280	$15,710	$2,650	B / Medium	C	5/8	1-3/8	650
HDSD-0601LQ#DE-D	3DA3F28KE	$17,240	$17,740	$2,650	D / Medium	E	5/8	1-3/8	650
HDSD-0750LQ#DE-D	3DB3F33KE	$17,310	$17,800	$2,650	D / Medium	E	5/8	1-3/8	650
HDSD-0750LQ#FF-D	3DB3F33KE	$20,560	$21,160	$2,650	F / Large	F	5/8	1-3/8	1,250
HDSD-0900LQ#FF-D	3DF3F40KE	$21,230	$21,800	$2,650	F / Large	F	5/8	1-3/8	1,250
HDSD-0900LQ#JH-D	3DF3F40KE	$26,280	$26,980	$2,650	J / X-Large	H	5/8	1-3/8	1,575
HDSD-1000LQ#FF-D	3DS3F46KE	$22,490	$23,000	$2,650	F / Large	F	5/8	1-3/8	1,250
HDSD-1000LQ#JH-D	3DS3F46KE	$27,540	$28,180	$2,650	J / X-Large	H	5/8	1-3/8	1,575
HDSD-1500LQ#JH-D	4DHNF63KE	$28,970	$29,580	$3,840	J / X-Large	H	7/8	1-5/8	1,575
HDSD-2200LQ#FF-A	4DJNF76KE	$24,450	$24,730	$3,840	F / Large	F	7/8	2-1/8	1,250
HDSD-2200LQ#JH-A	4DJNF76KE	$29,500	$29,910	$3,840	J / X-Large	H	7/8	2-1/8	1,575

- HE H-SERIES OPTIONS PAGE HAS STANDARD FEATURES AND BASIC OPTIONS LIST. USE H-SERIES SOFTWARE FOR ADDITIONAL CUSTOMIZATION.
- ORDERS MUST INCLUDE THE FULL MODEL NUMBER "HDSD-0500MQKBD-D"
HDSD options include sealed liquid drier, pump down switch, time clock, solid mounted compressor, and crating.

Prices, product availability, and specifications are subject to change without notice.

HIGH EFFICIENCY H-SERIES PRODUCT DESCRIPTION - CONDENSING UNITS

Version: August 2025

HDSD - HIGH EFFICIENCY H-SERIES COPELAND DISCUS CONDENSING UNITS

UNIT MODEL	COMPRESSOR MODEL	LIST PRICE 208/3/60 K	LIST PRICE 460/3/60 M	4 YEAR EXTENDED COMPRESSOR WARRANTY	TECHNICAL SPECIFICATIONS CONDENSER AND CABINET SIZE	RCVR SIZE	CONNECTIONS (IN) LIQUID	CONNECTIONS (IN) SUCTION	SHIP WGT (LB)
Discus - Medium Temperature R-449A									
HDSD-0500MR#BC-D	2DC3R53KE	$12,870	$13,310	$2,120	B / Medium	C	1/2	1-3/8	650
HDSD-0500MR#DE-D	2DC3R53KE	$14,840	$15,330	$2,120	D / Medium	E	1/2	1-3/8	650
HDSD-0501MR#DE-D	2DD3R63KE	$14,940	$15,430	$2,120	D / Medium	E	5/8	1-3/8	650
HDSD-0501MR#FF-D	2DD3R63KE	$18,150	$18,770	$2,120	F / Large	F	5/8	1-3/8	1,250
HDSD-0750MR#FF-D	2DL3R78KE	$19,000	$19,610	$2,120	F / Large	F	5/8	1-3/8	1,250
HDSD-0750MR#JH-D	2DL3R78KE	$24,060	$24,790	$2,120	J / X-Large	H	5/8	1-3/8	1,575
HDSD-0751MR#FF-D	2DA3R89KE	$18,370	$18,980	$2,120	F / Large	F	5/8	1-3/8	1,250
HDSD-0751MR#JH-D	2DA3R89KE	$23,420	$24,150	$2,120	J / X-Large	H	5/8	1-3/8	1,575
HDSD-0752MR#FF-D	3DA3R10ME	$19,020	$19,530	$2,650	F / Large	F	5/8	1-3/8	1,250
HDSD-0752MR#JH-D	3DA3R10ME	$24,070	$24,710	$2,650	J / X-Large	H	5/8	1-3/8	1,575
HDSD-1000MR#FF-D	3DB3R12ME	$19,980	$20,500	$2,650	F / Large	F	7/8	1-3/8	1,250
HDSD-1000MR#JH-D	3DB3R12ME	$25,030	$25,670	$2,650	J / X-Large	H	7/8	1-3/8	1,575
HDSD-1200MR#JH-D	3DF3R15ME	$24,170	$24,800	$2,650	J / X-Large	H	7/8	1-3/8	1,575
HDSD-1500MR#JH-D	3DS3R17ME	$24,270	$24,830	$2,650	J / X-Large	H	7/8	1-5/8	1,575

UNIT MODEL	COMPRESSOR MODEL	LIST PRICE 208/3/60 K	LIST PRICE 460/3/60 M	4 YEAR EXTENDED COMPRESSOR WARRANTY	TECHNICAL SPECIFICATIONS CONDENSER AND CABINET SIZE	RCVR SIZE	CONNECTIONS (IN) LIQUID	CONNECTIONS (IN) SUCTION	SHIP WGT (LBS)
Discus - Low Temperature - INCLUDES DEMAND COOLING REQUIRED FOR R-449A									
HDSD-0300LR#BC-D	2DF3F16KE	$14,230	$14,660	$2,120	B / Medium	C	1/2	1-3/8	650
HDSD-0300LR#DE-D	2DF3F16KE	$16,200	$16,690	$2,120	D / Medium	E	1/2	1-3/8	650
HDSD-0400LR#BC-D	2DL3F20KE	$14,620	$15,050	$2,120	B / Medium	C	5/8	1-3/8	650
HDSD-0400LR#DE-D	2DL3F20KE	$16,580	$17,080	$2,120	D / Medium	E	5/8	1-3/8	650
HDSD-0600LR#BC-D	2DB3F25KE	$15,160	$15,590	$2,120	B / Medium	C	5/8	1-3/8	650
HDSD-0600LR#DE-D	2DB3F25KE	$17,130	$17,620	$2,120	D / Medium	E	5/8	1-3/8	650
HDSD-0601LR#BC-D	3DA3F28KE	$15,280	$15,710	$2,650	B / Medium	C	5/8	1-3/8	650
HDSD-0601LR#DE-D	3DA3F28KE	$17,240	$17,740	$2,650	D / Medium	E	5/8	1-3/8	650
HDSD-0750LR#DE-D	3DB3F33KE	$17,310	$17,800	$2,650	D / Medium	E	5/8	1-3/8	650
HDSD-0750LR#FF-D	3DB3F33KE	$20,560	$21,160	$2,650	F / Large	F	5/8	1-3/8	1,250
HDSD-0900LR#FF-D	3DF3F40KE	$21,230	$21,800	$2,650	F / Large	F	5/8	1-3/8	1,250
HDSD-0900LR#JH-D	3DF3F40KE	$26,280	$26,980	$2,650	J / X-Large	H	5/8	1-3/8	1,575
HDSD-1000LR#FF-D	3DS3F46KE	$22,490	$23,000	$2,650	F / Large	F	5/8	1-3/8	1,250
HDSD-1000LR#JH-D	3DS3F46KE	$27,540	$28,180	$2,650	J / X-Large	H	5/8	1-3/8	1,575
HDSD-1500LR#JH-A	4DHNF63KE	$28,970	$29,580	$3,840	J / X-Large	H	7/8	1-5/8	1,575
HDSD-2200LR#FF-A	4DJNF76KE	$24,450	$24,730	$3,840	F / Large	F	7/8	2-1/8	1,250
HDSD-2200LR#JH-A	4DJNF76KE	$29,500	$29,910	$3,840	J / X-Large	H	7/8	2-1/8	1,575

- HE H-SERIES OPTIONS PAGE HAS STANDARD FEATURES AND BASIC OPTIONS LIST. USE H-SERIES SOFTWARE FOR ADDITIONAL CUSTOMIZATION.
- ORDERS MUST INCLUDE THE FULL MODEL NUMBER "HDSD-0500MRKBD-D"
HDSD options include sealed liquid drier, pump down switch, time clock, solid mounted compressor, and crating.

Prices, product availability, and specifications are subject to change without notice.

HIGH EFFICIENCY H-SERIES PRODUCT DESCRIPTION - CONDENSING UNITS

Version: August 2025

HDSD - HIGH EFFICIENCY H-SERIES COPELAND DISCUS CONDENSING UNITS

UNIT MODEL	COMPRESSOR MODEL	LIST PRICE 208/3/60 K	LIST PRICE 460/3/60 M	4 YEAR EXTENDED COMPRESSOR WARRANTY	TECHNICAL SPECIFICATIONS CONDENSER AND CABINET SIZE	RCVR SIZE	CONNECTIONS (IN) LIQUID	CONNECTIONS (IN) SUCTION	SHIP WGT (LB)
Discus - Medium Temperature R-404A									
HDSD-0500MS#BC-D	2DC3R53KE	$12,870	$13,310	$2,120	B / Medium	C	1/2	1-3/8	650
HDSD-0500MS#DE-D	2DC3R53KE	$14,840	$15,330	$2,120	D / Medium	E	1/2	1-3/8	650
HDSD-0501MS#DE-D	2DD3R63KE	$14,940	$15,430	$2,120	D / Medium	E	5/8	1-3/8	650
HDSD-0501MS#FF-D	2DD3R63KE	$18,150	$18,770	$2,120	F / Large	F	5/8	1-3/8	1,250
HDSD-0750MS#FF-D	2DL3R78KE	$19,000	$19,610	$2,120	F / Large	F	5/8	1-3/8	1,250
HDSD-0750MS#JH-D	2DL3R78KE	$24,060	$24,790	$2,120	J / X-Large	H	5/8	1-3/8	1,575
HDSD-0751MS#FF-D	2DA3R89KE	$18,370	$18,980	$2,120	F / Large	F	5/8	1-3/8	1,250
HDSD-0751MS#JH-D	2DA3R89KE	$23,420	$24,150	$2,120	J / X-Large	H	5/8	1-3/8	1,575
HDSD-0752MS#FF-D	3DA3R10ME	$19,020	$19,530	$2,650	F / Large	F	5/8	1-3/8	1,250
HDSD-0752MS#JH-D	3DA3R10ME	$24,070	$24,710	$2,650	J / X-Large	H	5/8	1-3/8	1,575
HDSD-1000MS#FF-D	3DB3R12ME	$19,980	$20,500	$2,650	F / Large	F	7/8	1-3/8	1,250
HDSD-1000MS#JH-D	3DB3R12ME	$25,030	$25,670	$2,650	J / X-Large	H	7/8	1-3/8	1,575
HDSD-1200MS#JH-D	3DF3R15ME	$24,170	$24,800	$2,650	J / X-Large	H	7/8	1-3/8	1,575
HDSD-1500MS#JH-D	3DS3R17ME	$24,270	$24,830	$2,650	J / X-Large	H	7/8	1-5/8	1,575

UNIT MODEL	COMPRESSOR MODEL	LIST PRICE 208/3/60 K	LIST PRICE 460/3/60 M	4 YEAR EXTENDED COMPRESSOR WARRANTY	TECHNICAL SPECIFICATIONS CONDENSER AND CABINET SIZE	RCVR SIZE	CONNECTIONS (IN) LIQUID	CONNECTIONS (IN) SUCTION	SHIP WGT (LB)
Discus - Low Temperature R-404A									
HDSD-0300LS#BC-D	2DF3F16KE	$12,770	$13,200	$2,120	B / Medium	C	1/2	1-3/8	650
HDSD-0300LS#DE-D	2DF3F16KE	$14,740	$15,230	$2,120	D / Medium	E	1/2	1-3/8	650
HDSD-0400LS#BC-D	2DL3F20KE	$13,160	$13,590	$2,120	B / Medium	C	5/8	1-3/8	650
HDSD-0400LS#DE-D	2DL3F20KE	$15,120	$15,620	$2,120	D / Medium	E	5/8	1-3/8	650
HDSD-0600LS#BC-D	2DB3F25KE	$13,700	$14,130	$2,120	B / Medium	C	5/8	1-3/8	650
HDSD-0600LS#DE-D	2DB3F25KE	$15,670	$16,160	$2,120	D / Medium	E	5/8	1-3/8	650
HDSD-0601LS#BC-D	3DA3F28KE	$13,810	$14,250	$2,650	B / Medium	C	5/8	1-3/8	650
HDSD-0601LS#DE-D	3DA3F28KE	$15,780	$16,280	$2,650	D / Medium	E	5/8	1-3/8	650
HDSD-0750LS#DE-D	3DB3F33KE	$15,880	$16,360	$2,650	D / Medium	E	5/8	1-3/8	650
HDSD-0750LS#FF-D	3DB3F33KE	$19,090	$19,700	$2,650	F / Large	F	5/8	1-3/8	1,250
HDSD-0900LS#FF-D	3DF3F40KE	$19,770	$20,340	$2,650	F / Large	F	5/8	1-3/8	1,250
HDSD-0900LS#JH-D	3DF3F40KE	$24,820	$25,520	$2,650	J / X-Large	H	5/8	1-3/8	1,575
HDSD-1000LS#FF-D	3DS3F46KE	$21,030	$21,540	$2,650	F / Large	F	5/8	1-3/8	1,250
HDSD-1000LS#JH-D	3DS3F46KE	$26,080	$26,720	$2,650	J / X-Large	H	5/8	1-3/8	1,575
HDSD-1500LS#JH-D	4DHNF63KE	$27,610	$28,220	$3,840	J / X-Large	H	7/8	1-5/8	1,575
HDSD-2200LS#FF-A	4DJNF76KE	$23,040	$23,320	$3,840	F / Large	F	7/8	2-1/8	1,250
HDSD-2200LS#JH-D	4DJNF76KE	$28,090	$28,500	$3,840	J / X-Large	H	7/8	2-1/8	1,575

- HE H-SERIES OPTIONS PAGE HAS STANDARD FEATURES AND BASIC OPTIONS LIST. USE H-SERIES SOFTWARE FOR ADDITIONAL CUSTOMIZATION.
- ORDERS MUST INCLUDE THE FULL MODEL NUMBER "HDSD-0500MSKBD-D"
HDSD options include sealed liquid drier, pump down switch, time clock, solid mounted compressor, and crating.

Prices, product availability, and specifications are subject to change without notice.

HIGH EFFICIENCY H-SERIES PRODUCT DESCRIPTION - CONDENSING UNITS

Version: August 2025

HDSD - HIGH EFFICIENCY H-SERIES COPELAND DISCUS CONDENSING UNITS

UNIT MODEL	COMPRESSOR MODEL	LIST PRICE 208/3/60 K	LIST PRICE 460/3/60 M	4 YEAR EXTENDED COMPRESSOR WARRANTY	TECHNICAL SPECIFICATIONS CONDENSER AND CABINET SIZE	RCVR SIZE	CONNECTIONS (IN) LIQUID	CONNECTIONS (IN) SUCTION	SHIP WGT (LB)
Discus - Medium Temperature R-448A									
HDSD-0500MT#BC-D	2DC3R53KE	$12,870	$13,310	$2,120	B / Medium	C	1/2	1-3/8	650
HDSD-0500MT#DE-D	2DC3R53KE	$14,840	$15,330	$2,120	D / Medium	E	1/2	1-3/8	650
HDSD-0501MT#DE-D	2DD3R63KE	$14,940	$15,430	$2,120	D / Medium	E	5/8	1-3/8	650
HDSD-0501MT#FF-D	2DD3R63KE	$18,150	$18,770	$2,120	F / Large	F	5/8	1-3/8	1,250
HDSD-0750MT#FF-D	2DL3R78KE	$19,000	$19,610	$2,120	F / Large	F	5/8	1-3/8	1,250
HDSD-0750MT#JH-D	2DL3R78KE	$24,060	$24,790	$2,120	J / X-Large	H	5/8	1-3/8	1,575
HDSD-0751MT#FF-D	2DA3R89KE	$18,370	$18,980	$2,120	F / Large	F	5/8	1-3/8	1,250
HDSD-0751MT#JH-D	2DA3R89KE	$23,420	$24,150	$2,120	J / X-Large	H	5/8	1-3/8	1,575
HDSD-0752MT#FF-D	3DA3R10ME	$19,020	$19,530	$2,650	F / Large	F	5/8	1-3/8	1,250
HDSD-0752MT#JH-D	3DA3R10ME	$24,070	$24,710	$2,650	J / X-Large	H	5/8	1-3/8	1,575
HDSD-1000MT#FF-D	3DB3R12ME	$19,980	$20,500	$2,650	F / Large	F	7/8	1-3/8	1,250
HDSD-1000MT#JH-D	3DB3R12ME	$25,030	$25,670	$2,650	J / X-Large	H	7/8	1-3/8	1,575
HDSD-1200MT#JH-D	3DF3R15ME	$24,170	$24,800	$2,650	J / X-Large	H	7/8	1-3/8	1,575
HDSD-1500MT#JH-D	3DS3R17ME	$24,270	$24,830	$2,650	J / X-Large	H	7/8	1-5/8	1,575

UNIT MODEL	COMPRESSOR MODEL	LIST PRICE 208/3/60 K	LIST PRICE 460/3/60 M	4 YEAR EXTENDED COMPRESSOR WARRANTY	TECHNICAL SPECIFICATIONS CONDENSER AND CABINET SIZE	RCVR SIZE	CONNECTIONS (IN) LIQUID	CONNECTIONS (IN) SUCTION	SHIP WGT (LBS)
Discus - Low Temperature - INCLUDES DEMAND COOLING REQUIRED FOR R-448A									
HDSD-0300LT#BC-D	2DF3F16KE	$14,230	$14,660	$2,120	B / Medium	C	1/2	1-3/8	650
HDSD-0300LT#DE-D	2DF3F16KE	$16,200	$16,690	$2,120	D / Medium	E	1/2	1-3/8	650
HDSD-0400LT#BC-D	2DL3F20KE	$14,620	$15,050	$2,120	B / Medium	C	5/8	1-3/8	650
HDSD-0400LT#DE-D	2DL3F20KE	$16,580	$17,080	$2,120	D / Medium	E	5/8	1-3/8	650
HDSD-0600LT#BC-D	2DB3F25KE	$15,160	$15,590	$2,120	B / Medium	C	5/8	1-3/8	650
HDSD-0600LT#DE-D	2DB3F25KE	$17,130	$17,620	$2,120	D / Medium	E	5/8	1-3/8	650
HDSD-0601LT#BC-D	3DA3F28KE	$15,280	$15,710	$2,650	B / Medium	C	5/8	1-3/8	650
HDSD-0601LT#DE-D	3DA3F28KE	$17,240	$17,740	$2,650	D / Medium	E	5/8	1-3/8	650
HDSD-0750LT#DE-D	3DB3F33KE	$17,310	$17,800	$2,650	D / Medium	E	5/8	1-3/8	650
HDSD-0750LT#FF-D	3DB3F33KE	$20,560	$21,160	$2,650	F / Large	F	5/8	1-3/8	1,250
HDSD-0900LT#FF-D	3DF3F40KE	$21,230	$21,800	$2,650	F / Large	F	5/8	1-3/8	1,250
HDSD-0900LT#JH-D	3DF3F40KE	$26,280	$26,980	$2,650	J / X-Large	H	5/8	1-3/8	1,575
HDSD-1000LT#FF-D	3DS3F46KE	$22,490	$23,000	$2,650	F / Large	F	5/8	1-3/8	1,250
HDSD-1000LT#JH-D	3DS3F46KE	$27,540	$28,180	$2,650	J / X-Large	H	5/8	1-3/8	1,575
HDSD-1500LT#JH-A	4DHNF63KE	$28,970	$29,580	$3,840	J / X-Large	H	7/8	1-5/8	1,575
HDSD-2200LT#FF-A	4DJNF76KE	$24,450	$24,730	$3,840	F / Large	F	7/8	2-1/8	1,250
HDSD-2200LT#JH-A	4DJNF76KE	$29,500	$29,910	$3,840	J / X-Large	H	7/8	2-1/8	1,575

- HE H-SERIES OPTIONS PAGE HAS STANDARD FEATURES AND BASIC OPTIONS LIST. USE H-SERIES SOFTWARE FOR ADDITIONAL CUSTOMIZATION.
- ORDERS MUST INCLUDE THE FULL MODEL NUMBER "HDSD-0500MTKBD-D"
HDSD options include sealed liquid drier, pump down switch, time clock, solid mounted compressor, and crating.

Prices, product availability, and specifications are subject to change without notice.

HIGH EFFICIENCY H-SERIES PRODUCT DESCRIPTION - CONDENSING UNITS

Version: August 2025

HDSB - HIGH EFFICIENCY H-SERIES BITZER ECOLINE CONDENSING UNITS

UNIT MODEL	COMPRESSOR MODEL	LIST PRICE 208/3/60 K	LIST PRICE 460/3/60 M	4 YEAR EXTENDED COMPRESSOR WARRANTY	TECHNICAL SPECIFICATIONS CONDENSER AND CABINET SIZE	RCVR SIZE	CONNECTIONS (IN) LIQUID	CONNECTIONS (IN) SUCTION	SHIP WGT (LBS)
Bitzer Ecoline - Medium Temperature R-407F									
HDSB-0050MF#BC-D	2KES-05	$10,130	$10,560	$970	B / Medium	C	1/2	5/8	650
HDSB-0070MF#BC-D	2JES-07	$10,210	$10,650	$970	B / Medium	C	1/2	5/8	650
HDSB-0070MF#DE-D	2JES-07	$12,180	$12,680	$970	D / Medium	E	1/2	5/8	650
HDSB-0100MF#BC-D	2HES-1	$10,390	$10,820	$970	B / Medium	C	1/2	5/8	650
HDSB-0100MF#DE-D	2HES-1	$12,360	$12,850	$970	D / Medium	E	1/2	5/8	650
HDSB-0150MF#BC-D	2FES-2	$10,420	$10,860	$970	B / Medium	C	5/8	5/8	650
HDSB-0150MF#DE-D	2FES-2	$12,390	$12,890	$970	D / Medium	E	5/8	5/8	650
HDSB-0200MF#BC-D	2EES-2	$11,300	$11,730	$1,340	B / Medium	C	5/8	7/8	650
HDSB-0200MF#DE-D	2EES-2	$13,260	$13,760	$1,340	D / Medium	E	5/8	7/8	650
HDSB-0220MF#DE-D	2DES-2	$13,500	$14,000	$1,340	D / Medium	E	5/8	7/8	650
HDSB-0220MF#FF-D	2DES-2	$16,720	$17,340	$1,340	F / Large	F	5/8	7/8	1,250
HDSB-0300MF#DE-D	2CES-3	$13,650	$14,140	$1,340	D / Medium	E	5/8	7/8	650
HDSB-0300MF#FF-D	2CES-3	$16,860	$17,480	$1,340	F / Large	F	5/8	7/8	1,250
HDSB-0400MF#FF-D	4FES-3	$17,670	$18,290	$1,880	F / Large	F	5/8	7/8	1,250
HDSB-0400MF#JH-D	4FES-3	$22,720	$23,460	$1,880	J / X-Large	H	5/8	7/8	1,575
HDSB-0500MF#FF-D	4EES-4	$17,870	$18,490	$1,880	F / Large	F	5/8	1-1/8	1,250
HDSB-0500MF#JH-D	4EES-4	$22,920	$23,670	$1,880	J / X-Large	H	5/8	1-1/8	1,575
HDSB-0600MF#FF-D	4DES-5	$18,360	$18,980	$1,880	F / Large	F	5/8	1-1/8	1,250
HDSB-0600MF#JH-D	4DES-5	$23,410	$24,160	$1,880	J / X-Large	H	5/8	1-1/8	1,575
HDSB-0650MF#FF-D	4CES-6	$19,680	$20,290	$1,880	F / Large	F	5/8	1-1/8	1,250
HDSB-0650MF#JH-D	4CES-6	$24,730	$25,470	$1,880	J / X-Large	H	5/8	1-1/8	1,575
HDSB-0700MF#FF-D	4VES-7	$20,100	$20,710	$2,550	F / Large	F	7/8	1-1/8	1,250
HDSB-0700MF#JH-D	4VES-7	$25,150	$25,890	$2,550	J / X-Large	H	7/8	1-1/8	1,575
HDSB-0900MF#JH-D	4TES-9	$25,460	$26,190	$2,550	J / X-Large	H	7/8	1-3/8	1,575
HDSB-1000MF#JH-D	4PES-12	$25,690	$26,390	$2,550	J / X-Large	H	7/8	1-3/8	1,575
HDSB-1200MF#JH-D	4NES-14	$26,400	$27,040	$2,550	J / X-Large	H	7/8	1-3/8	1,575

UNIT MODEL	COMPRESSOR MODEL	LIST PRICE 208/3/60 K	LIST PRICE 460/3/60 M	4 YEAR EXTENDED COMPRESSOR WARRANTY	TECHNICAL SPECIFICATIONS CONDENSER AND CABINET SIZE	RCVR SIZE	CONNECTIONS (IN) LIQUID	CONNECTIONS (IN) SUCTION	SHIP WGT (LB)
Bitzer Ecoline - Low Temperature R-407F									
HDSB-0050LF#AB-D	2KES-05	$8,770	$9,210	$970	A / Small	B	1/2	5/8	400
HDSB-0050LF#BC-D	2KES-05	$10,130	$10,560	$970	B / Medium	C	1/2	5/8	650
HDSB-0070LF#AB-D	2JES-07	$8,860	$9,290	$970	A / Small	B	1/2	5/8	400
HDSB-0070LF#BC-D	2JES-07	$10,210	$10,650	$970	B / Medium	C	1/2	5/8	650
HDSB-0100LF#AB-D	2HES-1	$9,030	$9,470	$970	A / Small	B	1/2	5/8	400
HDSB-0100LF#BC-D	2HES-1	$10,390	$10,820	$970	B / Medium	C	1/2	5/8	650
HDSB-0150LF#AB-D	2FES-2	$9,060	$9,500	$970	A / Small	B	1/2	5/8	400
HDSB-0150LF#BC-D	2FES-2	$10,420	$10,860	$970	B / Medium	C	1/2	5/8	650
HDSB-0200LF#AB-D	2EES-2	$9,940	$10,370	$1,340	A / Small	B	1/2	7/8	400
HDSB-0200LF#BC-D	2EES-2	$11,300	$11,730	$1,340	B / Medium	C	1/2	7/8	650
HDSB-0220LF#AB-D	2DES-2	$10,180	$10,610	$1,340	A / Small	B	1/2	7/8	400
HDSB-0220LF#BC-D	2DES-2	$11,540	$11,970	$1,340	B / Medium	C	1/2	7/8	650
HDSB-0300LF#AB-D	2CES-3	$10,320	$10,760	$1,340	A / Small	B	5/8	7/8	400
HDSB-0300LF#BC-D	2CES-3	$11,680	$12,120	$1,340	B / Medium	C	5/8	7/8	650
HDSB-0400LF#BC-D	4FES-3	$13,000	$13,430	$1,880	B / Medium	C	5/8	7/8	650
HDSB-0400LF#DE-D	4FES-3	$14,960	$15,460	$1,880	D / Medium	E	5/8	7/8	650
HDSB-0500LF#BC-D	4EES-4	$13,200	$13,630	$1,880	B / Medium	C	5/8	1-1/8	650
HDSB-0500LF#DE-D	4EES-4	$15,170	$15,660	$1,880	D / Medium	E	5/8	1-1/8	650
HDSB-0600LF#BC-D	4DES-5	$13,680	$14,120	$1,880	B / Medium	C	5/8	1-1/8	650
HDSB-0600LF#DE-D	4DES-5	$15,650	$16,150	$1,880	D / Medium	E	5/8	1-1/8	650
HDSB-0650LF#BC-D	4CES-6	$15,000	$15,430	$1,880	B / Medium	C	5/8	1-1/8	650
HDSB-0650LF#DE-D	4CES-6	$16,970	$17,460	$1,880	D / Medium	E	5/8	1-1/8	650
HDSB-0700LF#BC-D	4VES-7	$15,370	$15,800	$2,550	B / Medium	C	5/8	1-1/8	650
HDSB-0700LF#DE-D	4VES-7	$17,340	$17,830	$2,550	D / Medium	E	5/8	1-1/8	650
HDSB-0900LF#BC-D	4TES-9	$15,630	$16,050	$2,550	B / Medium	C	5/8	1-3/8	650
HDSB-0900LF#DE-D	4TES-9	$17,600	$18,080	$2,550	D / Medium	E	5/8	1-3/8	650
HDSB-1000LF#BC-D	4PES-12	$15,860	$16,250	$2,550	B / Medium	C	5/8	1-3/8	650
HDSB-1000LF#DE-D	4PES-12	$17,830	$18,280	$2,550	D / Medium	E	5/8	1-3/8	650
HDSB-1200LF#FF-D	4NES-14	$21,840	$22,340	$2,550	F / Large	F	5/8	1-3/8	1,250
HDSB-1200LF#JH-D	4NES-14	$26,890	$27,520	$2,550	J / X-Large	H	5/8	1-3/8	1,575
HDSB-1400LF#FF-D	4JE-15	$22,870	$23,310	$3,690	F / Large	F	7/8	1-5/8	1,250
HDSB-1400LF#JH-D	4JE-15	$27,920	$28,490	$3,690	J / X-Large	H	7/8	1-5/8	1,575
HDSB-1600LF#FF-D	4HE-18	$23,450	$23,730	$3,690	F / Large	F	7/8	1-5/8	1,250
HDSB-1600LF#JH-D	4HE-18	$28,500	$28,910	$3,690	J / X-Large	H	7/8	1-5/8	1,575

- HE H-SERIES OPTIONS PAGE HAS STANDARD FEATURES AND BASIC OPTIONS LIST. USE H-SERIES SOFTWARE FOR ADDITIONAL CUSTOMIZATION.

- ORDERS MUST INCLUDE THE FULL MODEL NUMBER INCLUDING CONDENSER AND RECEIVER "HDSB-0200MQKAB"

HDSB options include sealed liquid drier, pump down switch, time clock, solid mounted compressor, and crating.

(1) Maximum +32°F suction operation for B motor 2 compressors shown. Use E model motor 1 compressor where operation may exceed +20°F or for more efficient medium temperature operation. Add $670 list to B motor pricing for E motors, confirm DOE from tech bulletin and update model number.

Prices, product availability, and specifications are subject to change without notice.

HIGH EFFICIENCY H-SERIES PRODUCT DESCRIPTION - CONDENSING UNITS

Version: August 2025

HDSB - HIGH EFFICIENCY H-SERIES BITZER ECOLINE CONDENSING UNITS

UNIT MODEL	COMPRESSOR MODEL	LIST PRICE 208/3/60 K	LIST PRICE 460/3/60 M	4 YEAR EXTENDED COMPRESSOR WARRANTY	TECHNICAL SPECIFICATIONS CONDENSER AND CABINET SIZE	RCVR SIZE	CONNECTIONS (IN) LIQUID	CONNECTIONS (IN) SUCTION	SHIP WGT (LB)
Bitzer Ecoline - Medium Temperature R-507A									
HDSB-0050MP#BC-D	2KES-05	$10,130	$10,560	$970	B / Medium	C	1/2	5/8	650
HDSB-0070MP#BC-D	2JES-07	$10,210	$10,650	$970	B / Medium	C	1/2	5/8	650
HDSB-0070MP#DE-D	2JES-07	$12,180	$12,680	$970	D / Medium	E	1/2	5/8	650
HDSB-0100MP#BC-D	2HES-1	$10,390	$10,820	$970	B / Medium	C	1/2	5/8	650
HDSB-0100MP#DE-D	2HES-1	$12,360	$12,850	$970	D / Medium	E	1/2	5/8	650
HDSB-0150MP#BC-D	2FES-2	$10,420	$10,860	$970	B / Medium	C	5/8	5/8	650
HDSB-0150MP#DE-D	2FES-2	$12,390	$12,890	$970	D / Medium	E	5/8	5/8	650
HDSB-0200MP#BC-D	2EES-2	$11,300	$11,730	$1,340	B / Medium	C	5/8	7/8	650
HDSB-0200MP#DE-D	2EES-2	$13,260	$13,760	$1,340	D / Medium	E	5/8	7/8	650
HDSB-0220MP#DE-D	2DES-2	$13,500	$14,000	$1,340	D / Medium	E	5/8	7/8	650
HDSB-0220MP#FF-D	2DES-2	$16,720	$17,340	$1,340	F / Large	F	5/8	7/8	1,250
HDSB-0300MP#DE-D	2CES-3	$13,650	$14,140	$1,340	D / Medium	E	5/8	7/8	650
HDSB-0300MP#FF-D	2CES-3	$16,890	$17,510	$1,340	F / Large	F	5/8	7/8	1,250
HDSB-0400MP#FF-D	4FES-3	$17,670	$18,290	$1,880	F / Large	F	5/8	7/8	1,250
HDSB-0400MP#JH-D	4FES-3	$22,720	$23,460	$1,880	J / X-Large	H	5/8	7/8	1,575
HDSB-0500MP#FF-D	4EES-4	$17,870	$18,490	$1,880	F / Large	F	5/8	1-1/8	1,250
HDSB-0500MP#JH-D	4EES-4	$22,920	$23,670	$1,880	J / X-Large	H	5/8	1-1/8	1,575
HDSB-0600MP#FF-D	4DES-5	$18,360	$18,980	$1,880	F / Large	F	5/8	1-1/8	1,250
HDSB-0600MP#JH-D	4DES-5	$23,410	$24,160	$1,880	J / X-Large	H	5/8	1-1/8	1,575
HDSB-0650MP#FF-D	4CES-6	$19,730	$20,340	$1,880	F / Large	F	5/8	1-1/8	1,250
HDSB-0650MP#JH-D	4CES-6	$24,780	$25,520	$1,880	J / X-Large	H	5/8	1-1/8	1,575
HDSB-0700MP#FF-D	4VES-7	$20,150	$20,760	$2,550	F / Large	F	7/8	1-1/8	1,250
HDSB-0700MP#JH-D	4VES-7	$25,200	$25,940	$2,550	J / X-Large	H	7/8	1-1/8	1,575
HDSB-0900MP#JH-D	4TES-9	$25,460	$26,190	$2,550	J / X-Large	H	7/8	1-3/8	1,575
HDSB-1000MP#JH-D	4PES-12	$25,690	$26,390	$2,550	J / X-Large	H	7/8	1-3/8	1,575
HDSB-1200MP#JH-D	4NES-14	$26,400	$27,040	$2,550	J / X-Large	H	7/8	1-3/8	1,575

UNIT MODEL	COMPRESSOR MODEL	LIST PRICE 208/3/60 K	LIST PRICE 460/3/60 M	4 YEAR EXTENDED COMPRESSOR WARRANTY	TECHNICAL SPECIFICATIONS CONDENSER AND CABINET SIZE	RCVR SIZE	CONNECTIONS (IN) LIQUID	CONNECTIONS (IN) SUCTION	SHIP WGT (LBS)
Bitzer Ecoline - Low Temperature R-507A									
HDSB-0050LP#AB-D	2KES-05	$8,770	$9,210	$970	A / Small	B	1/2	5/8	400
HDSB-0050LP#BC-D	2KES-05	$10,130	$10,560	$970	B / Medium	C	1/2	5/8	650
HDSB-0070LP#AB-D	2JES-07	$8,860	$9,290	$970	A / Small	B	1/2	5/8	400
HDSB-0070LP#BC-D	2JES-07	$10,210	$10,650	$970	B / Medium	C	1/2	5/8	650
HDSB-0100LP#AB-D	2HES-1	$9,030	$9,470	$970	A / Small	B	1/2	5/8	400
HDSB-0100LP#BC-D	2HES-1	$10,390	$10,820	$970	B / Medium	C	1/2	5/8	650
HDSB-0150LP#AB-D	2FES-2	$9,060	$9,500	$970	A / Small	B	1/2	5/8	400
HDSB-0150LP#BC-D	2FES-2	$10,420	$10,860	$970	B / Medium	C	1/2	5/8	650
HDSB-0200LP#AB-D	2EES-2	$9,940	$10,370	$1,340	A / Small	B	1/2	7/8	400
HDSB-0200LP#BC-D	2EES-2	$11,300	$11,730	$1,340	B / Medium	C	1/2	7/8	650
HDSB-0220LP#AB-D	2DES-2	$10,180	$10,610	$1,340	A / Small	B	1/2	7/8	400
HDSB-0220LP#BC-D	2DES-2	$11,540	$11,970	$1,340	B / Medium	C	1/2	7/8	650
HDSB-0300LP#AB-D	2CES-3	$10,320	$10,760	$1,340	A / Small	B	5/8	7/8	400
HDSB-0300LP#BC-D	2CES-3	$11,680	$12,120	$1,340	B / Medium	C	5/8	7/8	650
HDSB-0400LP#BC-D	4FES-3	$12,460	$12,890	$1,880	B / Medium	C	5/8	7/8	650
HDSB-0400LP#DE-D	4FES-3	$14,430	$14,920	$1,880	D / Medium	E	5/8	7/8	650
HDSB-0500LP#BC-D	4EES-4	$12,660	$13,100	$1,880	B / Medium	C	5/8	1-1/8	650
HDSB-0500LP#DE-D	4EES-4	$14,630	$15,120	$1,880	D / Medium	E	5/8	1-1/8	650
HDSB-0600LP#BC-D	4DES-5	$13,150	$13,580	$1,880	B / Medium	C	5/8	1-1/8	650
HDSB-0600LP#DE-D	4DES-5	$15,120	$15,610	$1,880	D / Medium	E	5/8	1-1/8	650
HDSB-0650LP#BC-D	4CES-6	$14,470	$14,900	$1,880	B / Medium	C	5/8	1-1/8	650
HDSB-0650LP#DE-D	4CES-6	$16,440	$16,920	$1,880	D / Medium	E	5/8	1-1/8	650
HDSB-0700LP#BC-D	4VES-7	$14,890	$15,320	$2,550	B / Medium	C	5/8	1-1/8	650
HDSB-0700LP#DE-D	4VES-7	$16,860	$17,350	$2,550	D / Medium	E	5/8	1-1/8	650
HDSB-0900LF#BC-D	4TES-9	$15,140	$15,570	$2,550	B / Medium	C	5/8	1-3/8	650
HDSB-0900LP#DE-D	4TES-9	$17,140	$17,620	$2,550	D / Medium	E	5/8	1-3/8	650
HDSB-1000LF#BC-D	4PES-12	$15,380	$15,770	$2,550	B / Medium	C	5/8	1-3/8	650
HDSB-1000LP#DE-D	4PES-12	$17,380	$17,820	$2,550	D / Medium	E	5/8	1-3/8	650
HDSB-1200LP#FF-D	4NES-14	$21,300	$21,810	$2,550	F / Large	F	5/8	1-3/8	1,250
HDSB-1200LP#JH-D	4NES-14	$26,350	$26,990	$2,550	J / X-Large	H	5/8	1-3/8	1,575
HDSB-1400LP#FF-D	4JE-15	$22,340	$22,780	$3,690	F / Large	F	7/8	1-5/8	1,250
HDSB-1400LP#JH-D	4JE-15	$27,440	$28,010	$3,690	J / X-Large	H	7/8	1-5/8	1,575
HDSB-1600LP#FF-D	4HE-18	$22,950	$23,240	$3,690	F / Large	F	7/8	1-5/8	1,250
HDSB-1600LP#JH-D	4HE-18	$28,000	$28,410	$3,690	J / X-Large	H	7/8	1-5/8	1,575

- HE H-SERIES OPTIONS PAGE HAS STANDARD FEATURES AND BASIC OPTIONS LIST. USE H-SERIES SOFTWARE FOR ADDITIONAL CUSTOMIZATION.

- ORDERS MUST INCLUDE THE FULL MODEL NUMBER INCLUDING CONDENSER AND RECEIVER "HDSB-0200MPKAB"

HDSB options include sealed liquid drier, pump down switch, time clock, solid mounted compressor, and crating.

(1) Maximum +32°F suction operation for B motor 2 compressors shown. Use E model motor 1 compressor where operation may exceed +20°F or for more efficient medium temperature operation. Add $670 list to B motor pricing for E motors, confirm DOE from tech bulletin and update model number.

Prices, product availability, and specifications are subject to change without notice.

HIGH EFFICIENCY H-SERIES PRODUCT DESCRIPTION - CONDENSING UNITS

Version: August 2025

HDSB - HIGH EFFICIENCY H-SERIES BITZER ECOLINE CONDENSING UNITS

UNIT MODEL	COMPRESSOR MODEL	LIST PRICE 208/3/60 K	LIST PRICE 460/3/60 M	4 YEAR EXTENDED COMPRESSOR WARRANTY	TECHNICAL SPECIFICATIONS CONDENSER AND CABINET SIZE	RCVR SIZE	CONNECTIONS (IN) LIQUID	CONNECTIONS (IN) SUCTION	SHIP WGT (LB)
Bitzer Ecoline - Medium Temperature R-407A									
HDSB-0050MQ#BC-D	2KES-05	$10,130	$10,560	$970	B / Medium	C	1/2	5/8	650
HDSB-0070MQ#BC-D	2JES-07	$10,210	$10,650	$970	B / Medium	C	1/2	5/8	650
HDSB-0070MQ#DE-D	2JES-07	$12,180	$12,680	$970	D / Medium	E	1/2	5/8	650
HDSB-0100MQ#BC-D	2HES-1	$10,390	$10,820	$970	B / Medium	C	1/2	5/8	650
HDSB-0100MQ#DE-D	2HES-1	$12,360	$12,850	$970	D / Medium	E	1/2	5/8	650
HDSB-0150MQ#BC-D	2FES-2	$10,420	$10,860	$970	B / Medium	C	5/8	5/8	650
HDSB-0150MQ#DE-D	2FES-2	$12,390	$12,890	$970	D / Medium	E	5/8	5/8	650
HDSB-0200MQ#BC-D	2EES-2	$11,300	$11,730	$1,340	B / Medium	C	5/8	7/8	650
HDSB-0200MQ#DE-D	2EES-2	$13,260	$13,760	$1,340	D / Medium	E	5/8	7/8	650
HDSB-0220MQ#DE-D	2DES-2	$13,500	$14,000	$1,340	D / Medium	E	5/8	7/8	650
HDSB-0220MQ#FF-D	2DES-2	$16,720	$17,340	$1,340	F / Large	F	5/8	7/8	1,250
HDSB-0300MQ#DE-D	2CES-3	$13,650	$14,140	$1,340	D / Medium	E	5/8	7/8	650
HDSB-0300MQ#FF-D	2CES-3	$16,890	$17,510	$1,340	F / Large	F	5/8	7/8	1,250
HDSB-0400MQ#FF-D	4FES-3	$17,670	$18,290	$1,880	F / Large	F	5/8	7/8	1,250
HDSB-0400MQ#JH-D	4FES-3	$22,720	$23,460	$1,880	J / X-Large	H	5/8	7/8	1,575
HDSB-0500MQ#FF-D	4EES-4	$17,870	$18,490	$1,880	F / Large	F	5/8	1-1/8	1,250
HDSB-0500MQ#JH-D	4EES-4	$22,920	$23,670	$1,880	J / X-Large	H	5/8	1-1/8	1,575
HDSB-0600MQ#FF-D	4DES-5	$18,360	$18,980	$1,880	F / Large	F	5/8	1-1/8	1,250
HDSB-0600MQ#JH-D	4DES-5	$23,410	$24,160	$1,880	J / X-Large	H	5/8	1-1/8	1,575
HDSB-0650MQ#FF-D	4CES-6	$19,730	$20,340	$1,880	F / Large	F	5/8	1-1/8	1,250
HDSB-0650MQ#JH-D	4CES-6	$24,780	$25,520	$1,880	J / X-Large	H	5/8	1-1/8	1,575
HDSB-0700MQ#FF-D	4VES-7	$20,150	$20,760	$2,550	F / Large	F	7/8	1-1/8	1,250
HDSB-0700MQ#JH-D	4VES-7	$25,200	$25,940	$2,550	J / X-Large	H	7/8	1-1/8	1,575
HDSB-0900MQ#JH-D	4TES-9	$25,460	$26,190	$2,550	J / X-Large	H	7/8	1-3/8	1,575
HDSB-1000MQ#JH-D	4PES-12	$25,690	$26,390	$2,550	J / X-Large	H	7/8	1-3/8	1,575
HDSB-1200MQ#JH-D	4NES-14	$26,400	$27,040	$2,550	J / X-Large	H	7/8	1-3/8	1,575

UNIT MODEL	COMPRESSOR MODEL	LIST PRICE 208/3/60 K	LIST PRICE 460/3/60 M	4 YEAR EXTENDED COMPRESSOR WARRANTY	TECHNICAL SPECIFICATIONS CONDENSER AND CABINET SIZE	RCVR SIZE	CONNECTIONS (IN) LIQUID	CONNECTIONS (IN) SUCTION	SHIP WGT (LB)
Bitzer Ecoline - Low Temperature R-407A									
HDSB-0050LQ#AB-D	2KES-05	$8,770	$9,210	$970	A / Small	B	1/2	5/8	400
HDSB-0050LQ#BC-D	2KES-05	$10,130	$10,560	$970	B / Medium	C	1/2	5/8	650
HDSB-0070LQ#AB-D	2JES-07	$8,860	$9,290	$970	A / Small	B	1/2	5/8	400
HDSB-0070LQ#BC-D	2JES-07	$10,210	$10,650	$970	B / Medium	C	1/2	5/8	650
HDSB-0100LQ#AB-D	2HES-1	$9,030	$9,470	$970	A / Small	B	1/2	5/8	400
HDSB-0100LQ#BC-D	2HES-1	$10,390	$10,820	$970	B / Medium	C	1/2	5/8	650
HDSB-0150LQ#AB-D	2FES-2	$9,060	$9,500	$970	A / Small	B	1/2	5/8	400
HDSB-0150LQ#BC-D	2FES-2	$10,420	$10,860	$970	B / Medium	C	1/2	5/8	650
HDSB-0200LQ#AB-D	2EES-2	$9,940	$10,370	$1,340	A / Small	B	1/2	7/8	400
HDSB-0200LQ#BC-D	2EES-2	$11,300	$11,730	$1,340	B / Medium	C	1/2	7/8	650
HDSB-0220LQ#AB-D	2DES-2	$10,180	$10,610	$1,340	A / Small	B	1/2	7/8	400
HDSB-0220LQ#BC-D	2DES-2	$11,540	$11,970	$1,340	B / Medium	C	1/2	7/8	650
HDSB-0300LQ#AB-D	2CES-3	$10,320	$10,760	$1,340	A / Small	B	5/8	7/8	400
HDSB-0300LQ#BC-D	2CES-3	$11,680	$12,120	$1,340	B / Medium	C	5/8	7/8	650
HDSB-0400LQ#BC-D	4FES-3	$13,000	$13,430	$1,880	B / Medium	C	5/8	7/8	650
HDSB-0400LQ#DE-D	4FES-3	$14,960	$15,460	$1,880	D / Medium	E	5/8	7/8	650
HDSB-0500LQ#BC-D	4EES-4	$13,200	$13,630	$1,880	B / Medium	C	5/8	1-1/8	650
HDSB-0500LQ#DE-D	4EES-4	$15,170	$15,660	$1,880	D / Medium	E	5/8	1-1/8	650
HDSB-0600LQ#BC-D	4DES-5	$13,680	$14,120	$1,880	B / Medium	C	5/8	1-1/8	650
HDSB-0600LQ#DE-D	4DES-5	$15,650	$16,150	$1,880	D / Medium	E	5/8	1-1/8	650
HDSB-0650LQ#BC-D	4CES-6	$15,000	$15,430	$1,880	B / Medium	C	5/8	1-1/8	650
HDSB-0650LQ#DE-D	4CES-6	$16,970	$17,460	$1,880	D / Medium	E	5/8	1-1/8	650
HDSB-0700LQ#BC-D	4VES-7	$15,370	$15,800	$2,550	B / Medium	C	5/8	1-1/8	650
HDSB-0700LQ#DE-D	4VES-7	$17,340	$17,830	$2,550	D / Medium	E	5/8	1-1/8	650
HDSB-0900LF#BC-D	4TES-9	$15,630	$16,050	$2,550	B / Medium	C	5/8	1-3/8	650
HDSB-0900LQ#DE-D	4TES-9	$17,600	$18,080	$2,550	D / Medium	E	5/8	1-3/8	650
HDSB-1000LF#BC-D	4PES-12	$15,860	$16,250	$2,550	B / Medium	C	5/8	1-3/8	650
HDSB-1000LQ#DE-D	4PES-12	$17,830	$18,280	$2,550	D / Medium	E	5/8	1-3/8	650
HDSB-1200LQ#FF-D	4NES-14	$21,840	$22,340	$2,550	F / Large	F	5/8	1-3/8	1,250
HDSB-1200LQ#JH-D	4NES-14	$26,890	$27,520	$2,550	J / X-Large	H	5/8	1-3/8	1,575
HDSB-1400LQ#FF-D	4JE-15	$22,870	$23,310	$3,690	F / Large	F	7/8	1-5/8	1,250
HDSB-1400LQ#JH-D	4JE-15	$27,920	$28,490	$3,690	J / X-Large	H	7/8	1-5/8	1,575
HDSB-1600LQ#FF-D	4HE-18	$23,450	$23,730	$3,690	F / Large	F	7/8	1-5/8	1,250
HDSB-1600LQ#JH-D	4HE-18	$28,500	$28,910	$3,690	J / X-Large	H	7/8	1-5/8	1,575

- HE H-SERIES OPTIONS PAGE HAS STANDARD FEATURES AND BASIC OPTIONS LIST. USE H-SERIES SOFTWARE FOR ADDITIONAL CUSTOMIZATION.

- ORDERS MUST INCLUDE THE FULL MODEL NUMBER INCLUDING CONDENSER AND RECEIVER "HDSB-0200MQKAB"

HDSB options include sealed liquid drier, pump down switch, time clock, solid mounted compressor, and crating.

(1) Maximum +32°F suction operation for B motor 2 compressors shown. Use E model motor 1 compressor where operation may exceed +20°F or for more efficient medium temperature operation. Add $670 list to B motor pricing for E motors, confirm DOE from tech bulletin and update model number.

Prices, product availability, and specifications are subject to change without notice.

HIGH EFFICIENCY H-SERIES PRODUCT DESCRIPTION - CONDENSING UNITS

Version: August 2025

HDSB - HIGH EFFICIENCY H-SERIES BITZER ECOLINE CONDENSING UNITS

UNIT MODEL	COMPRESSOR MODEL	LIST PRICE 208/3/60 K	LIST PRICE 460/3/60 M	4 YEAR EXTENDED COMPRESSOR WARRANTY	TECHNICAL SPECIFICATIONS CONDENSER AND CABINET SIZE	RCVR SIZE	CONNECTIONS (IN) LIQUID	CONNECTIONS (IN) SUCTION	SHIP WGT (LB)
Bitzer Ecoline - Medium Temperature R-449A									
HDSB-0050MR#BC-D	2KES-05	$10,130	$10,560	$970	B / Medium	C	1/2	5/8	650
HDSB-0070MR#BC-D	2JES-07	$10,210	$10,650	$970	B / Medium	C	1/2	5/8	650
HDSB-0070MR#DE-D	2JES-07	$12,180	$12,680	$970	D / Medium	E	1/2	5/8	650
HDSB-0100MR#BC-D	2HES-1	$10,390	$10,820	$970	B / Medium	C	1/2	5/8	650
HDSB-0100MR#DE-D	2HES-1	$12,360	$12,850	$970	D / Medium	E	1/2	5/8	650
HDSB-0150MR#BC-D	2FES-2	$10,420	$10,860	$970	B / Medium	C	5/8	5/8	650
HDSB-0150MR#DE-D	2FES-2	$12,390	$12,890	$970	D / Medium	E	5/8	5/8	650
HDSB-0200MR#BC-D	2EES-2	$11,300	$11,730	$1,340	B / Medium	C	5/8	7/8	650
HDSB-0200MR#DE-D	2EES-2	$13,260	$13,760	$1,340	D / Medium	E	5/8	7/8	650
HDSB-0220MR#DE-D	2DES-2	$13,500	$14,000	$1,340	D / Medium	E	5/8	7/8	650
HDSB-0220MR#FF-D	2DES-2	$16,720	$17,340	$1,340	F / Large	F	5/8	7/8	1,250
HDSB-0300MR#DE-D	2CES-3	$13,650	$14,140	$1,340	D / Medium	E	5/8	7/8	650
HDSB-0300MR#FF-D	2CES-3	$16,890	$17,510	$1,340	F / Large	F	5/8	7/8	1,250
HDSB-0400MR#FF-D	4FES-3	$17,670	$18,290	$1,880	F / Large	F	5/8	7/8	1,250
HDSB-0400MR#JH-D	4FES-3	$22,720	$23,460	$1,880	J / X-Large	H	5/8	7/8	1,575
HDSB-0500MR#FF-D	4EES-4	$17,870	$18,490	$1,880	F / Large	F	5/8	1-1/8	1,250
HDSB-0500MR#JH-D	4EES-4	$22,920	$23,670	$1,880	J / X-Large	H	5/8	1-1/8	1,575
HDSB-0600MR#FF-D	4DES-5	$18,360	$18,980	$1,880	F / Large	F	5/8	1-1/8	1,250
HDSB-0600MR#JH-D	4DES-5	$23,410	$24,160	$1,880	J / X-Large	H	5/8	1-1/8	1,575
HDSB-0650MR#FF-D	4CES-6	$19,730	$20,340	$1,880	F / Large	F	5/8	1-1/8	1,250
HDSB-0650MR#JH-D	4CES-6	$24,780	$25,520	$1,880	J / X-Large	H	5/8	1-1/8	1,575
HDSB-0700MR#FF-D	4VES-7	$20,150	$20,760	$2,550	F / Large	F	7/8	1-1/8	1,250
HDSB-0700MR#JH-D	4VES-7	$25,200	$25,940	$2,550	J / X-Large	H	7/8	1-1/8	1,575
HDSB-0900MR#JH-D	4TES-9	$25,460	$26,190	$2,550	J / X-Large	H	7/8	1-3/8	1,575
HDSB-1000MR#JH-D	4PES-12	$25,690	$26,390	$2,550	J / X-Large	H	7/8	1-3/8	1,575
HDSB-1200MR#JH-D	4NES-14	$26,400	$27,040	$2,550	J / X-Large	H	7/8	1-3/8	1,575

UNIT MODEL	COMPRESSOR MODEL	LIST PRICE 208/3/60 K	LIST PRICE 460/3/60 M	4 YEAR EXTENDED COMPRESSOR WARRANTY	TECHNICAL SPECIFICATIONS CONDENSER AND CABINET SIZE	RCVR SIZE	CONNECTIONS (IN) LIQUID	CONNECTIONS (IN) SUCTION	SHIP WGT (LB)
Bitzer Ecoline - Low Temperature R-449A									
HDSB-0050LR#AB-D	2KES-05	$8,770	$9,210	$970	A / Small	B	1/2	5/8	400
HDSB-0050LR#BC-D	2KES-05	$10,130	$10,560	$970	B / Medium	C	1/2	5/8	650
HDSB-0070LR#AB-D	2JES-07	$8,860	$9,290	$970	A / Small	B	1/2	5/8	400
HDSB-0070LR#BC-D	2JES-07	$10,210	$10,650	$970	B / Medium	C	1/2	5/8	650
HDSB-0100LR#AB-D	2HES-1	$9,030	$9,470	$970	A / Small	B	1/2	5/8	400
HDSB-0100LR#BC-D	2HES-1	$10,390	$10,820	$970	B / Medium	C	1/2	5/8	650
HDSB-0150LR#AB-D	2FES-2	$9,060	$9,500	$970	A / Small	B	1/2	5/8	400
HDSB-0150LR#BC-D	2FES-2	$10,420	$10,860	$970	B / Medium	C	1/2	5/8	650
HDSB-0200LR#AB-D	2EES-2	$9,940	$10,370	$1,340	A / Small	B	1/2	7/8	400
HDSB-0200LR#BC-D	2EES-2	$11,300	$11,730	$1,340	B / Medium	C	1/2	7/8	650
HDSB-0220LR#AB-D	2DES-2	$10,180	$10,610	$1,340	A / Small	B	1/2	7/8	400
HDSB-0220LR#BC-D	2DES-2	$11,540	$11,970	$1,340	B / Medium	C	1/2	7/8	650
HDSB-0300LR#AB-D	2CES-3	$10,320	$10,760	$1,340	A / Small	B	5/8	7/8	400
HDSB-0300LR#BC-D	2CES-3	$11,680	$12,120	$1,340	B / Medium	C	5/8	7/8	650
HDSB-0400LR#BC-D	4FES-3	$13,000	$13,430	$1,880	B / Medium	C	5/8	7/8	650
HDSB-0400LR#DE-D	4FES-3	$14,960	$15,460	$1,880	D / Medium	E	5/8	7/8	650
HDSB-0500LR#BC-D	4EES-4	$13,200	$13,630	$1,880	B / Medium	C	5/8	1-1/8	650
HDSB-0500LR#DE-D	4EES-4	$15,170	$15,660	$1,880	D / Medium	E	5/8	1-1/8	650
HDSB-0600LR#BC-D	4DES-5	$13,680	$14,120	$1,880	B / Medium	C	5/8	1-1/8	650
HDSB-0600LR#DE-D	4DES-5	$15,650	$16,150	$1,880	D / Medium	E	5/8	1-1/8	650
HDSB-0650LR#BC-D	4CES-6	$15,000	$15,430	$1,880	B / Medium	C	5/8	1-1/8	650
HDSB-0650LR#DE-D	4CES-6	$16,970	$17,460	$1,880	D / Medium	E	5/8	1-1/8	650
HDSB-0700LR#BC-D	4VES-7	$15,370	$15,800	$2,550	B / Medium	C	5/8	1-1/8	650
HDSB-0700LR#DE-D	4VES-7	$17,340	$17,830	$2,550	D / Medium	E	5/8	1-1/8	650
HDSB-0900LF#BC-D	4TES-9	$15,630	$16,050	$2,550	B / Medium	C	5/8	1-3/8	650
HDSB-0900LR#DE-D	4TES-9	$17,600	$18,080	$2,550	D / Medium	E	5/8	1-3/8	650
HDSB-1000LF#BC-D	4PES-12	$15,860	$16,250	$2,550	B / Medium	C	5/8	1-3/8	650
HDSB-1000LR#DE-D	4PES-12	$17,830	$18,280	$2,550	D / Medium	E	5/8	1-3/8	650
HDSB-1200LR#FF-D	4NES-14	$21,840	$22,340	$2,550	F / Large	F	5/8	1-3/8	1,250
HDSB-1200LR#JH-D	4NES-14	$26,890	$27,520	$2,550	J / X-Large	H	5/8	1-3/8	1,575
HDSB-1400LR#FF-D	4JE-15	$22,870	$23,310	$3,690	F / Large	F	7/8	1-5/8	1,250
HDSB-1400LR#JH-D	4JE-15	$27,920	$28,490	$3,690	J / X-Large	H	7/8	1-5/8	1,575
HDSB-1600LR#FF-D	4HE-18	$23,450	$23,730	$3,690	F / Large	F	7/8	1-5/8	1,250
HDSB-1600LR#JH-D	4HE-18	$28,550	$28,960	$3,690	J / X-Large	H	7/8	1-5/8	1,575

-HE H-SERIES OPTIONS PAGE HAS STANDARD FEATURES AND BASIC OPTIONS LIST. USE H-SERIES SOFTWARE FOR ADDITIONAL CUSTOMIZATION.
-ORDERS MUST INCLUDE THE FULL MODEL NUMBER INCLUDING CONDENSER AND RECEIVER "HDSB-0200MRKAB"
HDSB options include sealed liquid drier, pump down switch, time clock, solid mounted compressor, and crating.

(1) Maximum +32°F suction operation for B motor 2 compressors shown. Use E model motor 1 compressor where operation may exceed +20°F for more efficient medium temperature operation.

Prices, product availability, and specifications are subject to change without notice.

HIGH EFFICIENCY H-SERIES PRODUCT DESCRIPTION - CONDENSING UNITS

Version: August 2025

HDSB - HIGH EFFICIENCY H-SERIES BITZER ECOLINE CONDENSING UNITS

UNIT MODEL	COMPRESSOR MODEL	LIST PRICE 208/3/60 K	LIST PRICE 460/3/60 M	4 YEAR EXTENDED COMPRESSOR WARRANTY	TECHNICAL SPECIFICATIONS CONDENSER AND CABINET SIZE	RCVR SIZE	CONNECTIONS (IN) LIQUID	CONNECTIONS (IN) SUCTION	SHIP WGT (LB)
Bitzer Ecoline - Medium Temperature R-404A									
HDSB-0050MS#BC-D	2KES-05	$10,130	$10,560	$970	B / Medium	C	1/2	5/8	650
HDSB-0070MS#BC-D	2JES-07	$10,210	$10,650	$970	B / Medium	C	1/2	5/8	650
HDSB-0070MS#DE-D	2JES-07	$12,180	$12,680	$970	D / Medium	E	1/2	5/8	650
HDSB-0100MS#BC-D	2HES-1	$10,390	$10,820	$970	B / Medium	C	1/2	5/8	650
HDSB-0100MS#DE-D	2HES-1	$12,360	$12,850	$970	D / Medium	E	1/2	5/8	650
HDSB-0150MS#BC-D	2FES-2	$10,420	$10,860	$970	B / Medium	C	5/8	5/8	650
HDSB-0150MS#DE-D	2FES-2	$12,390	$12,890	$970	D / Medium	E	5/8	5/8	650
HDSB-0200MS#BC-D	2EES-2	$11,300	$11,730	$1,340	B / Medium	C	5/8	7/8	650
HDSB-0200MS#DE-D	2EES-2	$13,260	$13,760	$1,340	D / Medium	E	5/8	7/8	650
HDSB-0220MS#DE-D	2DES-2	$13,500	$14,000	$1,340	D / Medium	E	5/8	7/8	650
HDSB-0220MS#FF-D	2DES-2	$16,720	$17,340	$1,340	F / Large	F	5/8	7/8	1,250
HDSB-0300MS#DE-D	2CES-3	$13,650	$14,140	$1,340	D / Medium	E	5/8	7/8	650
HDSB-0300MS#FF-D	2CES-3	$16,890	$17,510	$1,340	F / Large	F	5/8	7/8	1,250
HDSB-0400MS#FF-D	4FES-3	$17,670	$18,290	$1,880	F / Large	F	5/8	7/8	1,250
HDSB-0400MS#JH-D	4FES-3	$22,720	$23,460	$1,880	J / X-Large	H	5/8	7/8	1,575
HDSB-0500MS#FF-D	4EES-4	$17,870	$18,490	$1,880	F / Large	F	5/8	1-1/8	1,250
HDSB-0500MS#JH-D	4EES-4	$22,920	$23,670	$1,880	J / X-Large	H	5/8	1-1/8	1,575
HDSB-0600MS#FF-D	4DES-5	$18,360	$18,980	$1,880	F / Large	F	5/8	1-1/8	1,250
HDSB-0600MS#JH-D	4DES-5	$23,410	$24,160	$1,880	J / X-Large	H	5/8	1-1/8	1,575
HDSB-0650MS#FF-D	4CES-6	$19,730	$20,340	$1,880	F / Large	F	5/8	1-1/8	1,250
HDSB-0650MS#JH-D	4CES-6	$24,780	$25,520	$1,880	J / X-Large	H	5/8	1-1/8	1,575
HDSB-0700MS#FF-D	4VES-7	$20,150	$20,760	$2,550	F / Large	F	7/8	1-1/8	1,250
HDSB-0700MS#JH-D	4VES-7	$25,200	$25,940	$2,550	J / X-Large	H	7/8	1-1/8	1,575
HDSB-0900MS#JH-D	4TES-9	$25,460	$26,190	$2,550	J / X-Large	H	7/8	1-3/8	1,575
HDSB-1000MS#JH-D	4PES-12	$25,690	$26,390	$2,550	J / X-Large	H	7/8	1-3/8	1,575
HDSB-1200MS#JH-A	4NES-14	$26,400	$27,040	$2,550	J / X-Large	H	7/8	1-3/8	1,575

UNIT MODEL	COMPRESSOR MODEL	LIST PRICE 208/3/60 K	LIST PRICE 460/3/60 M	4 YEAR EXTENDED COMPRESSOR WARRANTY	TECHNICAL SPECIFICATIONS CONDENSER AND CABINET SIZE	RCVR SIZE	CONNECTIONS (IN) LIQUID	CONNECTIONS (IN) SUCTION	SHIP WGT (LB)
Bitzer Ecoline - Low Temperature R-404A									
HDSB-0050LS#AB-D	2KES-05	$8,770	$9,210	$970	A / Small	B	1/2	5/8	400
HDSB-0050LS#BC-D	2KES-05	$10,130	$10,560	$970	B / Medium	C	1/2	5/8	650
HDSB-0070LS#AB-D	2JES-07	$8,860	$9,290	$970	A / Small	B	1/2	5/8	400
HDSB-0070LS#BC-D	2JES-07	$10,210	$10,650	$970	B / Medium	C	1/2	5/8	650
HDSB-0100LS#AB-D	2HES-1	$9,030	$9,470	$970	A / Small	B	1/2	5/8	400
HDSB-0100LS#BC-D	2HES-1	$10,390	$10,820	$970	B / Medium	C	1/2	5/8	650
HDSB-0150LS#AB-D	2FES-2	$9,060	$9,500	$970	A / Small	B	1/2	5/8	400
HDSB-0150LS#BC-D	2FES-2	$10,420	$10,860	$970	B / Medium	C	1/2	5/8	650
HDSB-0200LS#AB-D	2EES-2	$9,940	$10,370	$1,340	A / Small	B	1/2	7/8	400
HDSB-0200LS#BC-D	2EES-2	$11,300	$11,730	$1,340	B / Medium	C	1/2	7/8	650
HDSB-0220LS#AB-D	2DES-2	$10,180	$10,610	$1,340	A / Small	B	1/2	7/8	400
HDSB-0220LS#BC-D	2DES-2	$11,540	$11,970	$1,340	B / Medium	C	1/2	7/8	650
HDSB-0300LS#AB-D	2CES-3	$10,320	$10,760	$1,340	A / Small	B	5/8	7/8	400
HDSB-0300LS#BC-D	2CES-3	$11,680	$12,120	$1,340	B / Medium	C	5/8	7/8	650
HDSB-0400LS#BC-D	4FES-3	$12,460	$12,890	$1,880	B / Medium	C	5/8	7/8	650
HDSB-0400LS#DE-D	4FES-3	$14,430	$14,920	$1,880	D / Medium	E	5/8	7/8	650
HDSB-0500LS#BC-D	4EES-4	$12,660	$13,100	$1,880	B / Medium	C	5/8	1-1/8	650
HDSB-0500LS#DE-D	4EES-4	$14,630	$15,120	$1,880	D / Medium	E	5/8	1-1/8	650
HDSB-0600LS#BC-D	4DES-5	$13,150	$13,580	$1,880	B / Medium	C	5/8	1-1/8	650
HDSB-0600LS#DE-D	4DES-5	$15,120	$15,610	$1,880	D / Medium	E	5/8	1-1/8	650
HDSB-0650LS#BC-D	4CES-6	$14,470	$14,900	$1,880	B / Medium	C	5/8	1-1/8	650
HDSB-0650LS#DE-D	4CES-6	$16,440	$16,920	$1,880	D / Medium	E	5/8	1-1/8	650
HDSB-0700LS#BC-D	4VES-7	$14,890	$15,320	$2,550	B / Medium	C	5/8	1-1/8	650
HDSB-0700LS#DE-D	4VES-7	$16,860	$17,350	$2,550	D / Medium	E	5/8	1-1/8	650
HDSB-0900LF#BC-D	4TES-9	$15,140	$15,570	$2,550	B / Medium	C	5/8	1-3/8	650
HDSB-0900LS#DE-D	4TES-9	$17,140	$17,620	$2,550	D / Medium	E	5/8	1-3/8	650
HDSB-1000LF#BC-D	4PES-12	$15,380	$15,770	$2,550	B / Medium	C	5/8	1-3/8	650
HDSB-1000LS#DE-D	4PES-12	$17,380	$17,820	$2,550	D / Medium	E	5/8	1-3/8	650
HDSB-1200LS#FF-D	4NES-14	$21,300	$21,810	$2,550	F / Large	F	5/8	1-3/8	1,250
HDSB-1200LS#JH-D	4NES-14	$26,350	$26,990	$2,550	J / X-Large	H	5/8	1-3/8	1,575
HDSB-1400LS#FF-D	4JE-15	$22,340	$22,780	$3,690	F / Large	F	7/8	1-5/8	1,250
HDSB-1400LS#JH-D	4JE-15	$27,440	$28,010	$3,690	J / X-Large	H	7/8	1-5/8	1,575
HDSB-1600LS#FF-A	4HE-18	$22,950	$23,240	$3,690	F / Large	F	7/8	1-5/8	1,250
HDSB-1600LS#JH-D	4HE-18	$28,000	$28,410	$3,690	J / X-Large	H	7/8	1-5/8	1,575

- HE H-SERIES OPTIONS PAGE HAS STANDARD FEATURES AND BASIC OPTIONS LIST. USE H-SERIES SOFTWARE FOR ADDITIONAL CUSTOMIZATION.

- ORDERS MUST INCLUDE THE FULL MODEL NUMBER INCLUDING CONDENSER AND RECEIVER "HDSB-0200MSKAB"

HDSB options include sealed liquid drier, pump down switch, time clock, solid mounted compressor, and crating.

(1) Maximum +32°F suction operation for B motor 2 compressors shown. Use E model motor 1 compressor where operation may exceed +20°F for more efficient medium temperature operation.

Prices, product availability, and specifications are subject to change without notice.

HIGH EFFICIENCY H-SERIES PRODUCT DESCRIPTION - CONDENSING UNITS

Version: August 2025

HDSB - HIGH EFFICIENCY H-SERIES BITZER ECOLINE CONDENSING UNITS

UNIT MODEL	COMPRESSOR MODEL	LIST PRICE 208/3/60 K	LIST PRICE 460/3/60 M	4 YEAR EXTENDED COMPRESSOR WARRANTY	TECHNICAL SPECIFICATIONS CONDENSER AND CABINET SIZE	RCVR SIZE	CONNECTIONS (IN) LIQUID	CONNECTIONS (IN) SUCTION	SHIP WGT (LB)
Bitzer Ecoline - Medium Temperature R-448A									
HDSB-0050MT#BC-D	2KES-05	$10,130	$10,560	$970	B / Medium	C	1/2	5/8	650
HDSB-0070MT#BC-D	2JES-07	$10,210	$10,650	$970	B / Medium	C	1/2	5/8	650
HDSB-0070MT#DE-D	2JES-07	$12,180	$12,680	$970	D / Medium	E	1/2	5/8	650
HDSB-0100MT#BC-D	2HES-1	$10,390	$10,820	$970	B / Medium	C	1/2	5/8	650
HDSB-0100MT#DE-D	2HES-1	$12,360	$12,850	$970	D / Medium	E	1/2	5/8	650
HDSB-0150MT#BC-D	2FES-2	$10,420	$10,860	$970	B / Medium	C	5/8	5/8	650
HDSB-0150MT#DE-D	2FES-2	$12,390	$12,890	$970	D / Medium	E	5/8	5/8	650
HDSB-0200MT#BC-D	2EES-2	$11,300	$11,730	$1,340	B / Medium	C	5/8	7/8	650
HDSB-0200MT#DE-D	2EES-2	$13,260	$13,760	$1,340	D / Medium	E	5/8	7/8	650
HDSB-0220MT#DE-D	2DES-2	$13,500	$14,000	$1,340	D / Medium	E	5/8	7/8	650
HDSB-0220MT#FF-D	2DES-2	$16,720	$17,340	$1,340	F / Large	F	5/8	7/8	1,250
HDSB-0300MT#DE-D	2CES-3	$13,650	$14,140	$1,340	D / Medium	E	5/8	7/8	650
HDSB-0300MT#FF-D	2CES-3	$16,890	$17,510	$1,340	F / Large	F	5/8	7/8	1,250
HDSB-0400MT#FF-D	4FES-3	$17,670	$18,290	$1,880	F / Large	F	5/8	7/8	1,250
HDSB-0400MT#JH-D	4FES-3	$22,720	$23,460	$1,880	J / X-Large	H	5/8	7/8	1,575
HDSB-0500MT#FF-D	4EES-4	$17,870	$18,490	$1,880	F / Large	F	5/8	1-1/8	1,250
HDSB-0500MT#JH-D	4EES-4	$22,920	$23,670	$1,880	J / X-Large	H	5/8	1-1/8	1,575
HDSB-0600MT#FF-D	4DES-5	$18,360	$18,980	$1,880	F / Large	F	5/8	1-1/8	1,250
HDSB-0600MT#JH-D	4DES-5	$23,410	$24,160	$1,880	J / X-Large	H	5/8	1-1/8	1,575
HDSB-0650MT#FF-D	4CES-6	$19,730	$20,340	$1,880	F / Large	F	5/8	1-1/8	1,250
HDSB-0650MT#JH-D	4CES-6	$24,780	$25,520	$1,880	J / X-Large	H	5/8	1-1/8	1,575
HDSB-0700MT#FF-D	4VES-7	$20,150	$20,760	$2,550	F / Large	F	7/8	1-1/8	1,250
HDSB-0700MT#JH-D	4VES-7	$25,200	$25,940	$2,550	J / X-Large	H	7/8	1-1/8	1,575
HDSB-0900MT#JH-D	4TES-9	$25,460	$26,190	$2,550	J / X-Large	H	7/8	1-3/8	1,575
HDSB-1000MT#JH-D	4PES-12	$25,690	$26,390	$2,550	J / X-Large	H	7/8	1-3/8	1,575
HDSB-1200MT#JH-D	4NES-14	$26,400	$27,040	$2,550	J / X-Large	H	7/8	1-3/8	1,575

UNIT MODEL	COMPRESSOR MODEL	LIST PRICE 208/3/60 K	LIST PRICE 460/3/60 M	4 YEAR EXTENDED COMPRESSOR WARRANTY	TECHNICAL SPECIFICATIONS CONDENSER AND CABINET SIZE	RCVR SIZE	CONNECTIONS (IN) LIQUID	CONNECTIONS (IN) SUCTION	SHIP WGT (LBS)
Bitzer Ecoline - Low Temperature R-448A									
HDSB-0050LT#AB-D	2KES-05	$8,770	$9,210	$970	A / Small	B	1/2	5/8	400
HDSB-0050LT#BC-D	2KES-05	$10,130	$10,560	$970	B / Medium	C	1/2	5/8	650
HDSB-0070LT#AB-D	2JES-07	$8,860	$9,290	$970	A / Small	B	1/2	5/8	400
HDSB-0070LT#BC-D	2JES-07	$10,210	$10,650	$970	B / Medium	C	1/2	5/8	650
HDSB-0100LT#AB-D	2HES-1	$9,030	$9,470	$970	A / Small	B	1/2	5/8	400
HDSB-0100LT#BC-D	2HES-1	$10,390	$10,820	$970	B / Medium	C	1/2	5/8	650
HDSB-0150LT#AB-D	2FES-2	$9,060	$9,500	$970	A / Small	B	1/2	5/8	400
HDSB-0150LT#BC-D	2FES-2	$10,420	$10,860	$970	B / Medium	C	1/2	5/8	650
HDSB-0200LT#AB-D	2EES-2	$9,940	$10,370	$1,340	A / Small	B	1/2	7/8	400
HDSB-0200LT#BC-D	2EES-2	$11,300	$11,730	$1,340	B / Medium	C	1/2	7/8	650
HDSB-0220LT#AB-D	2DES-2	$10,180	$10,610	$1,340	A / Small	B	1/2	7/8	400
HDSB-0220LT#BC-D	2DES-2	$11,540	$11,970	$1,340	B / Medium	C	1/2	7/8	650
HDSB-0300LT#AB-D	2CES-3	$10,320	$10,760	$1,340	A / Small	B	5/8	7/8	400
HDSB-0300LT#BC-D	2CES-3	$11,680	$12,120	$1,340	B / Medium	C	5/8	7/8	650
HDSB-0400LT#BC-D	4FES-3	$13,000	$13,430	$1,880	B / Medium	C	5/8	7/8	650
HDSB-0400LT#DE-D	4FES-3	$14,960	$15,460	$1,880	D / Medium	E	5/8	7/8	650
HDSB-0500LT#BC-D	4EES-4	$13,200	$13,630	$1,880	B / Medium	C	5/8	1-1/8	650
HDSB-0500LT#DE-D	4EES-4	$15,170	$15,660	$1,880	D / Medium	E	5/8	1-1/8	650
HDSB-0600LT#BC-D	4DES-5	$13,680	$14,120	$1,880	B / Medium	C	5/8	1-1/8	650
HDSB-0600LT#DE-D	4DES-5	$15,650	$16,150	$1,880	D / Medium	E	5/8	1-1/8	650
HDSB-0650LT#BC-D	4CES-6	$15,000	$15,430	$1,880	B / Medium	C	5/8	1-1/8	650
HDSB-0650LT#DE-D	4CES-6	$16,970	$17,460	$1,880	D / Medium	E	5/8	1-1/8	650
HDSB-0700LT#BC-D	4VES-7	$15,370	$15,800	$2,550	B / Medium	C	5/8	1-1/8	650
HDSB-0700LT#DE-D	4VES-7	$17,340	$17,830	$2,550	D / Medium	E	5/8	1-1/8	650
HDSB-0900LT#BC-D	4TES-9	$15,630	$16,050	$2,550	B / Medium	C	5/8	1-3/8	650
HDSB-0900LT#DE-D	4TES-9	$17,600	$18,080	$2,550	D / Medium	E	5/8	1-3/8	650
HDSB-1000LT#BC-D	4PES-12	$15,860	$16,250	$2,550	B / Medium	C	5/8	1-3/8	650
HDSB-1000LT#DE-D	4PES-12	$17,830	$18,280	$2,550	D / Medium	E	5/8	1-3/8	650
HDSB-1200LT#FF-D	4NES-14	$21,840	$22,340	$2,550	F / Large	F	5/8	1-3/8	1,250
HDSB-1200LT#JH-D	4NES-14	$26,890	$27,520	$2,550	J / X-Large	H	5/8	1-3/8	1,575
HDSB-1400LT#FF-D	4JE-15	$22,870	$23,310	$3,690	F / Large	F	7/8	1-5/8	1,250
HDSB-1400LT#JH-D	4JE-15	$27,920	$28,490	$3,690	J / X-Large	H	7/8	1-5/8	1,575
HDSB-1600LT#FF-D	4HE-18	$23,450	$23,730	$3,690	F / Large	F	7/8	1-5/8	1,250
HDSB-1600LT#JH-D	4HE-18	$28,550	$28,960	$3,690	J / X-Large	H	7/8	1-5/8	1,575

- HE H-SERIES OPTIONS PAGE HAS STANDARD FEATURES AND BASIC OPTIONS LIST. USE H-SERIES SOFTWARE FOR ADDITIONAL CUSTOMIZATION.

- ORDERS MUST INCLUDE THE FULL MODEL NUMBER INCLUDING CONDENSER AND RECEIVER "HDSB-0200MQKAB"

HDSB options include sealed liquid drier, pump down switch, time clock, solid mounted compressor, and crating.

(1) Maximum +32°F suction operation for B motor 2 compressors shown. Use E model motor 1 compressor where operation may exceed +20°F or for more efficient medium temperature operation. Add $670 list to B motor pricing for E motors, confirm DOE from tech bulletin and update model number.

Prices, product availability, and specifications are subject to change without notice.

HIGH EFFICIENCY H-SERIES PRODUCT DESCRIPTION - CONDENSING UNITS

Version: August 2025

HDSE - HIGH EFFICIENCY H-SERIES BITZER ECOLINE CONDENSING UNITS

UNIT MODEL	COMPRESSOR MODEL	LIST PRICE 208/3/60 K	LIST PRICE 460/3/60 M	4 YEAR EXTENDED COMPRESSOR WARRANTY	TECHNICAL SPECIFICATIONS CONDENSER AND CABINET SIZE	RCVR SIZE	CONNECTIONS (IN) LIQUID	CONNECTIONS (IN) SUCTION	SHIP WGT (LB)
Bitzer Ecoline - Medium Temperature R-407F									
HDSB-0050MF#BC-D	2KES-05	$10,130	$10,560	$970	B / Medium	C	1/2	5/8	650
HDSB-0070MF#BC-D	2JES-07	$10,210	$10,650	$970	B / Medium	C	1/2	5/8	650
HDSB-0070MF#DE-D	2JES-07	$12,180	$12,680	$970	D / Medium	E	1/2	5/8	650
HDSE-0100MF#BC-D	2HES-2	$11,270	$11,710	$970	B / Medium	C	1/2	5/8	650
HDSE-0100MF#DE-D	2HES-2	$13,240	$13,740	$970	D / Medium	E	1/2	5/8	650
HDSE-0150MF#BC-D	2FES-3	$11,570	$12,010	$970	B / Medium	C	5/8	5/8	650
HDSE-0150MF#DE-D	2FES-3	$13,540	$14,030	$970	D / Medium	E	5/8	5/8	650
HDSE-0200MF#BC-D	2EES-3	$11,930	$12,360	$1,340	B / Medium	C	5/8	7/8	650
HDSE-0200MF#DE-D	2EES-3	$13,900	$14,390	$1,340	D / Medium	E	5/8	7/8	650
HDSE-0220MF#DE-D	2DES-3	$14,180	$14,670	$1,340	D / Medium	E	5/8	7/8	650
HDSE-0220MF#FF-D	2DES-3	SEE NOTE 1	SEE NOTE 1	$1,340	F / Large	F	5/8	7/8	1,250
HDSE-0300MF#DE-D	2CES-4	$14,600	$15,100	$1,340	D / Medium	E	5/8	7/8	650
HDSE-0300MF#FF-D	2CES-4	$17,820	$18,440	$1,340	F / Large	F	5/8	7/8	1,250
HDSE-0400MF#FF-D	4FES-5	$18,060	$18,670	$1,880	F / Large	F	5/8	7/8	1,250
HDSE-0400MF#JH-D	4FES-5	$23,110	$23,850	$1,880	J / X-Large	H	5/8	7/8	1,575
HDSE-0500MF#FF-D	4EES-6	$18,260	$18,870	$1,880	F / Large	F	5/8	1-1/8	1,250
HDSE-0500MF#JH-D	4EES-6	$23,320	$24,040	$1,880	J / X-Large	H	5/8	1-1/8	1,575
HDSE-0600MF#FF-D	4DES-7	$18,750	$19,330	$1,880	F / Large	F	5/8	1-1/8	1,250
HDSE-0600MF#JH-D	4DES-7	$23,810	$24,500	$1,880	J / X-Large	H	5/8	1-1/8	1,575
HDSE-0700MF#FF-D	4VES-10	$20,470	$20,980	$2,550	F / Large	F	7/8	1-1/8	1,250
HDSE-0700MF#JH-D	4VES-10	$25,520	$26,150	$2,550	J / X-Large	H	7/8	1-1/8	1,575
HDSE-0900MF#FF-D	4TES-12	$20,820	$21,330	$2,550	F / Large	F	7/8	1-3/8	1,250
HDSE-0900MF#JH-D	4TES-12	$25,870	$26,500	$2,550	J / X-Large	H	7/8	1-3/8	1,575
HDSE-1000MF#JH-D	4PES-15	$25,950	$26,520	$2,550	J / X-Large	H	7/8	1-5/8	1,575
HDSE-1200MF#JH-D	4NES-20	$27,280	$27,730	$2,550	J / X-Large	H	7/8	1-5/8	1,575

- HE H-SERIES OPTIONS PAGE HAS STANDARD FEATURES AND BASIC OPTIONS LIST. USE H-SERIES SOFTWARE FOR ADDITIONAL CUSTOMIZATION.

- ORDERS MUST INCLUDE THE FULL MODEL NUMBER INCLUDING CONDENSER AND RECEIVER "HDSE-0200MFKAB"

HDSE options include sealed liquid drier, pump down switch, time clock, solid mounted compressor, and crating.

(1) Use "E" Bitzer Motor 1 compressor where operation is above +20°F for more efficient medium temperature operation.
(2) The "B" Bitzer Motor 2 compressor in the two smaller models is rated for higher temperature operation with no motor change.

NOTE 1 : CONTACT AN APPLICATION OR SALES ENGINEER FOR PRICING.

Prices, product availability, and specifications are subject to change without notice.

HIGH EFFICIENCY H-SERIES PRODUCT DESCRIPTION - CONDENSING UNITS

Version: August 2025

HDSE - HIGH EFFICIENCY H-SERIES BITZER ECOLINE CONDENSING UNITS

UNIT MODEL	COMPRESSOR MODEL	LIST PRICE 208/3/60 K	LIST PRICE 460/3/60 M	4 YEAR EXTENDED COMPRESSOR WARRANTY	TECHNICAL SPECIFICATIONS CONDENSER AND CABINET SIZE	RCVR SIZE	CONNECTIONS (IN) LIQUID	CONNECTIONS (IN) SUCTION	SHIP WGT (LB)
Bitzer Ecoline - Medium Temperature R-507A									
HDSB-0050MP#BC-A	2KES-05	$10,130	$10,560	$970	B / Medium	C	1/2	5/8	650
HDSB-0070MP#BC-A	2JES-07	$10,210	$10,650	$970	B / Medium	C	1/2	5/8	650
HDSB-0070MP#DE-A	2JES-07	$12,180	$12,680	$970	D / Medium	E	1/2	5/8	650
HDSE-0100MP#BC-D	2HES-2	$11,270	$11,710	$970	B / Medium	C	1/2	5/8	650
HDSE-0100MP#DE-D	2HES-2	$13,240	$13,740	$970	D / Medium	E	1/2	5/8	650
HDSE-0150MP#BC-D	2FES-3	$11,570	$12,010	$970	B / Medium	C	5/8	5/8	650
HDSE-0150MP#DE-D	2FES-3	$13,540	$14,030	$970	D / Medium	E	5/8	5/8	650
HDSE-0200MP#BC-D	2EES-3	$11,930	$12,360	$1,340	B / Medium	C	5/8	7/8	650
HDSE-0200MP#DE-D	2EES-3	$13,900	$14,390	$1,340	D / Medium	E	5/8	7/8	650
HDSE-0220MP#DE-D	2DES-3	$14,180	$14,670	$1,340	D / Medium	E	5/8	7/8	650
HDSE-0220MP#FF-D	2DES-3	SEE NOTE 1	SEE NOTE 1	$1,340	F / Large	F	5/8	7/8	1,250
HDSE-0300MP#DE-D	2CES-4	$14,600	$15,100	$1,340	D / Medium	E	5/8	7/8	650
HDSE-0300MP#FF-D	2CES-4	$17,850	$18,460	$1,340	F / Large	F	5/8	7/8	1,250
HDSE-0400MP#FF-D	4FES-5	$18,060	$18,670	$1,880	F / Large	F	5/8	7/8	1,250
HDSE-0400MP#JH-D	4FES-5	$23,110	$23,850	$1,880	J / X-Large	H	5/8	7/8	1,575
HDSE-0500MP#FF-D	4EES-6	$18,260	$18,870	$1,880	F / Large	F	5/8	1-1/8	1,250
HDSE-0500MP#JH-D	4EES-6	$23,320	$24,040	$1,880	J / X-Large	H	5/8	1-1/8	1,575
HDSE-0600MP#FF-D	4DES-7	$18,750	$19,330	$1,880	F / Large	F	5/8	1-1/8	1,250
HDSE-0600MP#JH-D	4DES-7	$23,810	$24,500	$1,880	J / X-Large	H	5/8	1-1/8	1,575
HDSE-0700MP#FF-D	4VES-10	$20,520	$21,030	$2,550	F / Large	F	7/8	1-1/8	1,250
HDSE-0700MP#JH-D	4VES-10	$25,570	$26,200	$2,550	J / X-Large	H	7/8	1-1/8	1,575
HDSE-0900MP#FF-D	4TES-12	$20,820	$21,330	$2,550	F / Large	F	7/8	1-3/8	1,250
HDSE-0900MP#JH-D	4TES-12	$25,870	$26,500	$2,550	J / X-Large	H	7/8	1-3/8	1,575
HDSE-1000MP#JH-D	4PES-15	$25,950	$26,520	$2,550	J / X-Large	H	7/8	1-5/8	1,575
HDSE-1200MP#JH-D	4NES-20	$27,280	$27,730	$2,550	J / X-Large	H	7/8	1-5/8	1,575

- HE H-SERIES OPTIONS PAGE HAS STANDARD FEATURES AND BASIC OPTIONS LIST. USE H-SERIES SOFTWARE FOR ADDITIONAL CUSTOMIZATION.

- ORDERS MUST INCLUDE THE FULL MODEL NUMBER INCLUDING CONDENSER AND RECEIVER "HDSE-0200MPKAB"

HDSE options include sealed liquid drier, pump down switch, time clock, solid mounted compressor, and crating.

(1) Use "E" Bitzer Motor 1 compressor where operation is above +20°F for more efficient medium temperature operation.
(2) The "B" Bitzer Motor 2 compressor in the two smaller models is rated for higher temperature operation with no motor change.

NOTE 1 : CONTACT AN APPLICATION OR SALES ENGINEER FOR PRICING.

Prices, product availability, and specifications are subject to change without notice.

HIGH EFFICIENCY H-SERIES PRODUCT DESCRIPTION - CONDENSING UNITS

Version: August 2025

HDSE - HIGH EFFICIENCY H-SERIES BITZER ECOLINE CONDENSING UNITS

UNIT MODEL	COMPRESSOR MODEL	LIST PRICE		4 YEAR EXTENDED COMPRESSOR WARRANTY	TECHNICAL SPECIFICATIONS				SHIP WGT (LB)
		208/3/60 K	460/3/60 M		CONDENSER AND CABINET SIZE	RCVR SIZE	CONNECTIONS (IN) LIQUID	CONNECTIONS (IN) SUCTION	
Bitzer Ecoline - Medium Temperature R-407A									
HDSB-0050MQ#BC-A	2KES-05	$10,130	$10,560	$970	B / Medium	C	1/2	5/8	650
HDSB-0070MQ#BC-D	2JES-07	$10,210	$10,650	$970	B / Medium	C	1/2	5/8	650
HDSB-0070MQ#DE-A	2JES-07	$12,180	$12,680	$970	D / Medium	E	1/2	5/8	650
HDSE-0100MQ#BC-D	2HES-2	$11,270	$11,710	$970	B / Medium	C	1/2	5/8	650
HDSE-0100MQ#DE-D	2HES-2	$13,240	$13,740	$970	D / Medium	E	1/2	5/8	650
HDSE-0150MQ#BC-D	2FES-3	$11,570	$12,010	$970	B / Medium	C	5/8	5/8	650
HDSE-0150MQ#DE-D	2FES-3	$13,540	$14,030	$970	D / Medium	E	5/8	5/8	650
HDSE-0200MQ#BC-D	2EES-3	$11,930	$12,360	$1,340	B / Medium	C	5/8	7/8	650
HDSE-0200MQ#DE-D	2EES-3	$13,900	$14,390	$1,340	D / Medium	E	5/8	7/8	650
HDSE-0220MQ#DE-D	2DES-3	$14,180	$14,670	$1,340	D / Medium	E	5/8	7/8	650
HDSE-0220MQ#FF-D	2DES-3	SEE NOTE 1	SEE NOTE 1	$1,340	F / Large	F	5/8	7/8	1,250
HDSE-0300MQ#DE-D	2CES-4	$14,600	$15,100	$1,340	D / Medium	E	5/8	7/8	650
HDSE-0300MQ#FF-D	2CES-4	$17,850	$18,460	$1,340	F / Large	F	5/8	7/8	1,250
HDSE-0400MQ#FF-D	4FES-5	$18,060	$18,670	$1,880	F / Large	F	5/8	7/8	1,250
HDSE-0400MQ#JH-D	4FES-5	$23,110	$23,850	$1,880	J / X-Large	H	5/8	7/8	1,575
HDSE-0500MQ#FF-D	4EES-6	$18,260	$18,870	$1,880	F / Large	F	5/8	1-1/8	1,250
HDSE-0500MQ#JH-D	4EES-6	$23,320	$24,040	$1,880	J / X-Large	H	5/8	1-1/8	1,575
HDSE-0600MQ#FF-D	4DES-7	$18,750	$19,330	$1,880	F / Large	F	5/8	1-1/8	1,250
HDSE-0600MQ#JH-D	4DES-7	$23,810	$24,500	$1,880	J / X-Large	H	5/8	1-1/8	1,575
HDSE-0700MQ#FF-D	4VES-10	$20,520	$21,030	$2,550	F / Large	F	7/8	1-1/8	1,250
HDSE-0700MQ#JH-D	4VES-10	$25,570	$26,200	$2,550	J / X-Large	H	7/8	1-1/8	1,575
HDSE-0900MQ#FF-D	4TES-12	$20,820	$21,330	$2,550	F / Large	F	7/8	1-3/8	1,250
HDSE-0900MQ#JH-D	4TES-12	$25,870	$26,500	$2,550	J / X-Large	H	7/8	1-3/8	1,575
HDSE-1000MQ#JH-D	4PES-15	$25,950	$26,520	$2,550	J / X-Large	H	7/8	1-5/8	1,575
HDSE-1200MQ#JH-D	4NES-20	$27,280	$27,730	$2,550	J / X-Large	H	7/8	1-5/8	1,575

-HE H-SERIES OPTIONS PAGE HAS STANDARD FEATURES AND BASIC OPTIONS LIST. USE H-SERIES SOFTWARE FOR ADDITIONAL CUSTOMIZATION.

-ORDERS MUST INCLUDE THE FULL MODEL NUMBER INCLUDING CONDENSER AND RECEIVER "HDSE-0200MQKAB"

HDSE options include sealed liquid drier, pump down switch, time clock, solid mounted compressor, and crating.

(1) Use "E" Bitzer Motor 1 compressor where operation is above +20°F for more efficient medium temperature operation.

(2) The "B" Bitzer Motor 2 compressor in the two smaller models is rated for higher temperature operation with no motor change.

NOTE 1 : CONTACT AN APPLICATION OR SALES ENGINEER FOR PRICING.

Prices, product availability, and specifications are subject to change without notice.

HDSE - HIGH EFFICIENCY H-SERIES BITZER ECOLINE CONDENSING UNITS

UNIT MODEL	COMPRESSOR MODEL	LIST PRICE 208/3/60 K	LIST PRICE 460/3/60 M	4 YEAR EXTENDED COMPRESSOR WARRANTY	TECHNICAL SPECIFICATIONS CONDENSER AND CABINET SIZE	RCVR SIZE	CONNECTIONS (IN) LIQUID	CONNECTIONS (IN) SUCTION	SHIP WGT (LB)
Bitzer Ecoline - Medium Temperature R-449A									
HDSB-0050MR#BC-A	2KES-05	$10,130	$10,560	$970	B / Medium	C	1/2	5/8	650
HDSB-0070MR#BC-A	2JES-07	$10,210	$10,650	$970	B / Medium	C	1/2	5/8	650
HDSB-0070MR#DE-A	2JES-07	$12,180	$12,680	$970	D / Medium	E	1/2	5/8	650
HDSE-0100MR#BC-D	2HES-2	$11,270	$11,710	$970	B / Medium	C	1/2	5/8	650
HDSE-0100MR#DE-D	2HES-2	$13,240	$13,740	$970	D / Medium	E	1/2	5/8	650
HDSE-0150MR#BC-D	2FES-3	$11,570	$12,010	$970	B / Medium	C	5/8	5/8	650
HDSE-0150MR#DE-D	2FES-3	$13,540	$14,030	$970	D / Medium	E	5/8	5/8	650
HDSE-0200MR#BC-D	2EES-3	$11,930	$12,360	$1,340	B / Medium	C	5/8	7/8	650
HDSE-0200MR#DE-D	2EES-3	$13,900	$14,390	$1,340	D / Medium	E	5/8	7/8	650
HDSE-0220MR#DE-D	2DES-3	$14,180	$14,670	$1,340	D / Medium	E	5/8	7/8	650
HDSE-0220MR#FF-D	2DES-3	SEE NOTE 1	SEE NOTE 1	$1,340	F / Large	F	5/8	7/8	1,250
HDSE-0300MR#DE-D	2CES-4	$14,600	$15,100	$1,340	D / Medium	E	5/8	7/8	650
HDSE-0300MR#FF-D	2CES-4	$17,850	$18,460	$1,340	F / Large	F	5/8	7/8	1,250
HDSE-0400MR#FF-D	4FES-5	$18,060	$18,670	$1,880	F / Large	F	5/8	7/8	1,250
HDSE-0400MR#JH-D	4FES-5	$23,110	$23,850	$1,880	J / X-Large	H	5/8	7/8	1,575
HDSE-0500MR#FF-D	4EES-6	$18,260	$18,870	$1,880	F / Large	F	5/8	1-1/8	1,250
HDSE-0500MR#JH-D	4EES-6	$23,320	$24,040	$1,880	J / X-Large	H	5/8	1-1/8	1,575
HDSE-0600MR#FF-D	4DES-7	$18,750	$19,330	$1,880	F / Large	F	5/8	1-1/8	1,250
HDSE-0600MR#JH-D	4DES-7	$23,810	$24,500	$1,880	J / X-Large	H	5/8	1-1/8	1,575
HDSE-0700MR#FF-D	4VES-10	$20,520	$21,030	$2,550	F / Large	F	7/8	1-1/8	1,250
HDSE-0700MR#JH-D	4VES-10	$25,570	$26,200	$2,550	J / X-Large	H	7/8	1-1/8	1,575
HDSE-0900MR#FF-D	4TES-12	$20,820	$21,330	$2,550	F / Large	F	7/8	1-3/8	1,250
HDSE-0900MR#JH-D	4TES-12	$25,870	$26,500	$2,550	J / X-Large	H	7/8	1-3/8	1,575
HDSE-1000MR#JH-D	4PES-15	$25,950	$26,520	$2,550	J / X-Large	H	7/8	1-5/8	1,575
HDSE-1200MR#JH-D	4NES-20	$27,280	$27,730	$2,550	J / X-Large	H	7/8	1-5/8	1,575

- HE H-SERIES OPTIONS PAGE HAS STANDARD FEATURES AND BASIC OPTIONS LIST. USE H-SERIES SOFTWARE FOR ADDITIONAL CUSTOMIZATION.

- ORDERS MUST INCLUDE THE FULL MODEL NUMBER INCLUDING CONDENSER AND RECEIVER "HDSE-0200MRKAB"

HDSE options include sealed liquid drier, pump down switch, time clock, solid mounted compressor, and crating.

(1) Use "E" Bitzer Motor 1 compressor where operation is above +20°F for more efficient medium temperature operation.

(2) The "B" Bitzer Motor 2 compressor in the two smaller models is rated for higher temperature operation with no motor change.

NOTE 1 : CONTACT AN APPLICATION OR SALES ENGINEER FOR PRICING.

Prices, product availability, and specifications are subject to change without notice.

HIGH EFFICIENCY H-SERIES PRODUCT DESCRIPTION - CONDENSING UNITS

Version: August 2025

HDSE - HIGH EFFICIENCY H-SERIES BITZER ECOLINE CONDENSING UNITS

UNIT MODEL	COMPRESSOR MODEL	LIST PRICE		4 YEAR EXTENDED COMPRESSOR WARRANTY	TECHNICAL SPECIFICATIONS				SHIP WGT (LB)
		208/3/60 K	460/3/60 M		CONDENSER AND CABINET SIZE	RCVR SIZE	CONNECTIONS (IN) LIQUID	CONNECTIONS (IN) SUCTION	
Bitzer Ecoline - Medium Temperature R-404A									
HDSB-0050MS#BC-D(2)	2KES-05	$10,130	$10,560	$970	B / Medium	C	1/2	5/8	650
HDSB-0070MS#BC-D(2)	2JES-07	$10,210	$10,650	$970	B / Medium	C	1/2	5/8	650
HDSB-0070MS#DE-D(2)	2JES-07	$12,180	$12,680	$970	D / Medium	E	1/2	5/8	650
HDSE-0100MS#BC-D	2HES-2	$11,270	$11,710	$970	B / Medium	C	1/2	5/8	650
HDSE-0100MS#DE-D	2HES-2	$13,240	$13,740	$970	D / Medium	E	1/2	5/8	650
HDSE-0150MS#BC-D	2FES-3	$11,570	$12,010	$970	B / Medium	C	5/8	5/8	650
HDSE-0150MS#DE-D	2FES-3	$13,540	$14,030	$970	D / Medium	E	5/8	5/8	650
HDSE-0200MS#BC-D	2EES-3	$11,930	$12,360	$1,340	B / Medium	C	5/8	7/8	650
HDSE-0200MS#DE-D	2EES-3	$13,900	$14,390	$1,340	D / Medium	E	5/8	7/8	650
HDSE-0220MS#DE-D	2DES-3	$14,180	$14,670	$1,340	D / Medium	E	5/8	7/8	650
HDSE-0220MS#FF-D	2DES-3	SEE NOTE 1	SEE NOTE 1	$1,340	F / Large	F	5/8	7/8	1,250
HDSE-0300MS#DE-D	2CES-4	$14,600	$15,100	$1,340	D / Medium	E	5/8	7/8	650
HDSE-0300MS#FF-D	2CES-4	$17,850	$18,460	$1,340	F / Large	F	5/8	7/8	1,250
HDSE-0400MS#FF-D	4FES-5	$18,060	$18,670	$1,880	F / Large	F	5/8	7/8	1,250
HDSE-0400MS#JH-D	4FES-5	$23,110	$23,850	$1,880	J / X-Large	H	5/8	7/8	1,575
HDSE-0500MS#FF-D	4EES-6	$18,260	$18,870	$1,880	F / Large	F	5/8	1-1/8	1,250
HDSE-0500MS#JH-D	4EES-6	$23,320	$24,040	$1,880	J / X-Large	H	5/8	1-1/8	1,575
HDSE-0600MS#FF-D	4DES-7	$18,750	$19,330	$1,880	F / Large	F	5/8	1-1/8	1,250
HDSE-0600MS#JH-D	4DES-7	$23,810	$24,500	$1,880	J / X-Large	H	5/8	1-1/8	1,575
HDSE-0700MS#FF-D	4VES-10	$20,520	$21,030	$2,550	F / Large	F	7/8	1-1/8	1,250
HDSE-0700MS#JH-D	4VES-10	$25,570	$26,200	$2,550	J / X-Large	H	7/8	1-1/8	1,575
HDSE-0900MS#FF-D	4TES-12	$20,820	$21,330	$2,550	F / Large	F	7/8	1-3/8	1,250
HDSE-0900MS#JH-D	4TES-12	$25,870	$26,500	$2,550	J / X-Large	H	7/8	1-3/8	1,575
HDSE-1000MS#JH-D	4PES-15	$25,950	$26,520	$2,550	J / X-Large	H	7/8	1-5/8	1,575
HDSE-1200MS#JH-D	4NES-20	$27,280	NOTE 1	$2,550	J / X-Large	H	7/8	1-5/8	1,575

- HE H-SERIES OPTIONS PAGE HAS STANDARD FEATURES AND BASIC OPTIONS LIST. USE H-SERIES SOFTWARE FOR ADDITIONAL CUSTOMIZATION.

- ORDERS MUST INCLUDE THE FULL MODEL NUMBER INCLUDING CONDENSER AND RECEIVER "HDSE-0200MSKAB"

HDSE options include sealed liquid drier, pump down switch, time clock, solid mounted compressor, and crating.

(1) Use "E" Bitzer Motor 1 compressor where operation is above +20°F for more efficient medium temperature operation.

(2) The "B" Bitzer Motor 2 compressor in the two smaller models is rated for higher temperature operation with no motor change.

NOTE 1 : CONTACT AN APPLICATION OR SALES ENGINEER FOR PRICING.

Prices, product availability, and specifications are subject to change without notice.

HIGH EFFICIENCY H-SERIES PRODUCT DESCRIPTION - CONDENSING UNITS

Version: August 2025

HDSE - HIGH EFFICIENCY H-SERIES BITZER ECOLINE CONDENSING UNITS

UNIT MODEL	COMPRESSOR MODEL	LIST PRICE		4 YEAR EXTENDED COMPRESSOR WARRANTY	TECHNICAL SPECIFICATIONS				SHIP WGT (LB)
		208/3/60 K	460/3/60 M		CONDENSER AND CABINET SIZE	RCVR SIZE	CONNECTIONS (IN) LIQUID	CONNECTIONS (IN) SUCTION	
Bitzer Ecoline - Medium Temperature R-448A									
HDSB-0050MT#BC-A	2KES-05	$10,130	$10,560	$970	B / Medium	C	1/2	5/8	650
HDSB-0070MT#BC-A	2JES-07	$10,210	$10,650	$970	B / Medium	C	1/2	5/8	650
HDSB-0070MT#DE-A	2JES-07	$12,180	$12,680	$970	D / Medium	E	1/2	5/8	650
HDSE-0100MT#BC-D	2HES-2	$11,270	$11,710	$970	B / Medium	C	1/2	5/8	650
HDSE-0100MT#DE-D	2HES-2	$13,240	$13,740	$970	D / Medium	E	1/2	5/8	650
HDSE-0150MT#BC-D	2FES-3	$11,570	$12,010	$970	B / Medium	C	5/8	5/8	650
HDSE-0150MT#DE-D	2FES-3	$13,540	$14,030	$970	D / Medium	E	5/8	5/8	650
HDSE-0200MT#BC-D	2EES-3	$11,930	$12,360	$1,340	B / Medium	C	5/8	7/8	650
HDSE-0200MT#DE-D	2EES-3	$13,900	$14,390	$1,340	D / Medium	E	5/8	7/8	650
HDSE-0220MT#DE-D	2DES-3	$14,180	$14,670	$1,340	D / Medium	E	5/8	7/8	650
HDSE-0220MT#FF-D	2DES-3	SEE NOTE 1	SEE NOTE 1	$1,340	F / Large	F	5/8	7/8	1,250
HDSE-0300MT#DE-D	2CES-4	$14,600	$15,100	$1,340	D / Medium	E	5/8	7/8	650
HDSE-0300MT#FF-D	2CES-4	$17,850	$18,460	$1,340	F / Large	F	5/8	7/8	1,250
HDSE-0400MT#FF-D	4FES-5	$18,060	$18,670	$1,880	F / Large	F	5/8	7/8	1,250
HDSE-0400MT#JH-D	4FES-5	$23,110	$23,850	$1,880	J / X-Large	H	5/8	7/8	1,575
HDSE-0500MT#FF-D	4EES-6	$18,260	$18,870	$1,880	F / Large	F	5/8	1-1/8	1,250
HDSE-0500MT#JH-D	4EES-6	$23,320	$24,040	$1,880	J / X-Large	H	5/8	1-1/8	1,575
HDSE-0600MT#FF-D	4DES-7	$18,750	$19,330	$1,880	F / Large	F	5/8	1-1/8	1,250
HDSE-0600MT#JH-D	4DES-7	$23,810	$24,500	$1,880	J / X-Large	H	5/8	1-1/8	1,575
HDSE-0700MT#FF-D	4VES-10	$20,520	$21,030	$2,550	F / Large	F	7/8	1-1/8	1,250
HDSE-0700MT#JH-D	4VES-10	$25,570	$26,200	$2,550	J / X-Large	H	7/8	1-1/8	1,575
HDSE-0900MT#FF-D	4TES-12	$20,820	$21,330	$2,550	F / Large	F	7/8	1-3/8	1,250
HDSE-0900MT#JH-D	4TES-12	$25,870	$26,500	$2,550	J / X-Large	H	7/8	1-3/8	1,575
HDSE-1000MT#JH-D	4PES-15	$25,950	$26,520	$2,550	J / X-Large	H	7/8	1-5/8	1,575
HDSE-1200MT#JH-D	4NES-20	$27,280	$27,730	$2,550	J / X-Large	H	7/8	1-5/8	1,575

- HE H-SERIES OPTIONS PAGE HAS STANDARD FEATURES AND BASIC OPTIONS LIST. USE H-SERIES SOFTWARE FOR ADDITIONAL CUSTOMIZATION.

- ORDERS MUST INCLUDE THE FULL MODEL NUMBER INCLUDING CONDENSER AND RECEIVER "HDSE-0200MTKAB"

HDSE options include sealed liquid drier, pump down switch, time clock, solid mounted compressor, and crating.

(1) Use "E" Bitzer Motor 1 compressor where operation is above +20°F for more efficient medium temperature operation.

(2) The "B" Bitzer Motor 2 compressor in the two smaller models is rated for higher temperature operation with no motor change.

NOTE 1 : CONTACT AN APPLICATION OR SALES ENGINEER FOR PRICING.

Prices, product availability, and specifications are subject to change without notice.

HIGH EFFICIENCY H-SERIES PRODUCT DESCRIPTION - CONDENSING UNITS

Version: August 2025

HIGH EFFICIENCY H-SERIES OPTIONS

APPLIES TO HIGH EFFICIENCY H-SERIES CONDENSING UNITS EQUIPPED WITH BITZER SEMI-HERMETIC, COPELAND DISCUS, and SCROLL COMPRESSORS

STANDARD OPTIONS

- Galvanized Steel Outdoor Housing
- Manual Reset High Pressure Control (Encapsulated)
- Adjustable Auto-Reset Low Pressure Control
- Oil Pressure Failure Control (Discus Compressors Only)
- Adjustable Head Pressure Control
- Crankcase Heater
- Vertical Receiver with Fusible Plug
- Compressor Contactor and Fuses
- Control Circuit with Fuses
- Sealed Liquid Line Drier and Sight Glass
- Pump Down Switch
- UL Listed
- Time Clock for Defrost Scheduling
- Oversized Condenser
- Ambient Fan Cycling on Multi-Fan Units (One-Stage)
- Skid with Plastic Wrap for Shipments (Default)

AVAILABLE OPTIONS (SHOWN BELOW)

- Sealed Suction Filter
- Replaceable Core Suction Filter
- Suction Accumulator
- Oil Separator
- Liquid Line Solenoid
- Fused Disconnect
- Phase Monitor
- Fan Cycling
- Electric Defrost Kits
- Electrofin Condenser Coating
- Oversized Receiver
- Hurricane-Rated Kits
- Wood Frame Crating for Shipments (Recommended for any LTL or PTL Deliveries)

ADDITIONAL OPTIONS AVAILABLE FROM SOFTWARE

- Stackable Indoor Option
- Oil Regulator
- Relief Valve Instead of Fusible Plug
- Oil Level Regulator (with Oil Separator)
- Compressor Unloader (Discus or Bitzer)
- Discharge Check Valve
- Receiver Heat and Insulation
- Suction Line Insulation
- Breaker Instead of Fuses
- Heavy Duty Base with Horizontal Receiver
- Non-Fused Disconnect
- Replaceable Core Drier
- Hail Guard

SUCTION FILTER			SUCTION ACCUMULATOR		OIL SEPARATOR		LIQUID LINE SOLENOID VALVE (SHIP LOOSE)	
SUCTION CONNECTION SIZE (INCHES)	STD SEALED AND NON-REPLACEABLE LIST PRICE	SPORLAND STEEL REPLACEABLE CORE LIST PRICE	SUCTION CONNECTION SIZE (INCHES)	LIST PRICE	DISCHARGE CONNECTION SIZE (INCHES)	LIST PRICE	LIQUID CONNECTION SIZE (INCHES)	LIST PRICE
5/8	$60	$250	5/8	$150	1/2 (S)	$680	1/2	$180
7/8	$50	$200	7/8	$120	5/8 (M)	$690	5/8	$220
1-1/8	$50	$200	1-1/8	$240	7/8 (L)	$730	7/8	$260
1-3/8	$80	$210	1-3/8	$320	1-1/8 (XL)	$910		
1-5/8	$80	$220	1-5/8	$420	1-3/8 (XXL)	$1,020		
2-1/8	$190	$240	2-1/8	$860				

DEFROST			
DEFROST KITS	RANGE	VOLTAGE	LIST PRICE
NO DEFROST CLOCK	NOT APPLICABLE	NOT APPLICABLE	- $130
DEFROST CLOCK	NOT APPLICABLE	208-230V OR 460V	INCLUDED
ELECTRIC DEFROST KIT- E2	1 OR 3 PHASE WITH A MAX OF (1) CONTACTOR BETWEEN FAN MOTOR OR HEATER WITH A MAX OF 48A	208-230V OR 460V	$180
ELECTRIC DEFROST KIT- E3	1 OR 3 PHASE WITH A MAX OF (2) CONTACTORS BETWEEN FAN MOTORS AND HEATERS WITH A MAX OF 48A	208-230V OR 460V	$420
ELECTRIC DEFROST KIT- E4	1 OR 3 PHASE WITH A MAX OF (3) CONTACTORS BETWEEN FAN MOTORS AND HEATERS WITH A MAX OF 48A	208-230V OR 460V	$660
ELECTRIC DEFROST KIT- E5	1 OR 3 PHASE WITH A MAX OF (4) CONTACTORS BETWEEN FAN MOTORS AND HEATERS WITH A MAX OF 48A	208-230V OR 460V	$900
ELECTRIC DEFROST KIT- E6	1 OR 3 PHASE WITH A MAX OF (5) CONTACTORS BETWEEN FAN MOTORS AND HEATERS WITH A MAX OF 48A	208-230V OR 460V	$1,140
ELECTRIC DEFROST KIT- E7	1 OR 3 PHASE WITH A MAX OF (6) CONTACTORS BETWEEN FAN MOTORS AND HEATERS WITH A MAX OF 48A	208-230V OR 460V	$1,210
ELECTRIC DEFROST KIT- E8	1 OR 3 PHASE WITH A MAX OF (7) CONTACTORS BETWEEN FAN MOTORS AND HEATERS WITH A MAX OF 48A (WITH SUB PROTECTION ONLY)	208-230V OR 460V	$900
NOTE 1:	MUST SPECIFY EVAPORATOR MOTOR AND HEATER VOLTAGE AND AMPERAGE ON ORDERS		
NOTE 2:	DEDUCT DEFROST CLOCK FROM STANDARD UNITS BEFORE ADDING ELECTRIC DEFROST KITS (- $130)		
NOTE3:	MAX CONFIGURATION WITHOUT SUBPROTECTION : (4) HEATERS <=48A AND (2) FAN LOADS <=48A (CONTACTED ENGINEERING FOR SUBPROTECTION OR VIEW CPQ SOFTWARE)		
NOTE 4:	THE ELECTRIC DEFROST "CATALOG" LIST PRICE IS BASED ON THE # OF CONTACTORS, FAN AND MOTOR AMPERAGE RANGE AT ITS MAX OF 48A. SEE CPQ SOFTWARE FOR ACTUAL LIST PRICE.		

RECEIVER							
SIZE	Dimensions	CAPACITY (LB @ 90%)			RECEIVER SIZE UPGRADE LIST PRICE (NOTE 3 AND 4)	CABINET SIZE	HEATED AND INSULATED RECEIVER LIST PRICE
		R-404A / R-507A	R-407A / R-407F	R-448A / R-449A			
A	6 X 12	11.1	12.2	11.6	(NOTE 1)	SMALL	NOT AVAILABLE
B	6 X 18	16.7	18.3	17.4	$10 (B TO C)	SMALL	$140
C	6 X 23	21.4	23.4	22.3	$40 (C TO D)	MEDIUM	$140
D	6 X 30	27.9	30.4	29.0	$380 (D TO E)	MEDIUM	$280
E	8-5/8 X 30	53.9	59.0	56.2	$300 (E TO F)	LARGE	$280
F	10-3/4 X 30	82.3	90.0	85.8	$690 (F TO H)	LARGE	$280
H	12-3/4 X 30	100.1	109.4	104.3	(NOTE 2)	LARGE	$420
NOTE 1:	RECEIVER '**A**' NOT AVAILABLE FOR HE H-SERIES						
NOTE 2:	NO UPGRADE FOR A SIZE '**H**' RECEIVER						
NOTE 3:	TO FIND THE COST OF THE RECEIVER UPGRADE, YOU MUST ADD THE COST TO THE BASE PRICE						
NOTE 4:	TO UPGRADE THE RECEIVER MORE THAN ONE SIZE, THE COST FOR EACH SIZE MUST BE ADDED TO THE BASE PRICE FOR EXAMPLE - GOING FROM SIZE **B** TO **D** IS ($10 + $40) = $50						
NOTE 5:	RECEIVERS CAN BE RESTRICTED BY CABINET SIZE (CONTACT ENGINEERING OR REFER TO CPQ SOFTWARE FOR FURTHER DETAILS)						

FUSED DISCONNECT (LOOSE)	
AMP / POLES / VOLTAGES	LIST PRICE
30A / 3P / 240V	$410
60A / 3P / 240V	$610
100A / 3P / 240V	$890
200A / 3P / 240V	$1,600
30A / 3P / 600V	$610
60A / 3P / 600V	$710
100A / 3P / 600V	$1,130
200A / 3P / 600V	$1,600

PHASE LOSS MONITOR	
VOLTAGE	LIST PRICE
208 - 460V	$230
575V	$230

CONDENSING UNIT CRATING KIT OPTIONS		
PLATFORM	PLASTIC / SKIT PRICE (STANDARD)	WOOD FRAME / CRATE PRICE
SMALL	INCLUDED	$420
MEDIUM	INCLUDED	$850
LARGE	INCLUDED	$1,270
X-LARGE	INCLUDED	$1,480

HE H-SERIES HURRICANE-RATED KITS (HIGH WIND KITS)		
CABINET	KIT #	LIST PRICE
SMALL	HHOUSESDHW	$1,620
MEDIUM	HHOUSEMDHW	$2,010
LARGE	HHOUSELDHW	$2,220
X-LARGE	HHOUSEXDHW	$2,900

CONDENSER COIL			
FAN CYCLING			CONDENSER PROTECTION
COND SIZE	# OF STAGES	LIST PRICE	ELECTROFIN PRICE
A	NA	NA	$420
B	NA	NA	$620
D	1	INCLUDED	$770
F	1	INCLUDED	$1,250
F	2	$260	$1,250
J	1	INCLUDED	$2,070
J	2	$270	$2,070
J	3	$530	$2,070

FRAME SIZE	STANDARD DUTY FRAME		HEAVY DUTY FRAME PRICE ADDER	
	INDOOR	OUTDOOR	INDOOR	OUTDOOR
SMALL	INCLUDED	INCLUDED	$50	$200
MEDIUM	INCLUDED	INCLUDED	$40	$110
LARGE	INCLUDED	INCLUDED	$210	$320
EXTRA LARGE	INCLUDED	INCLUDED	- $160	$40

Prices, product availability, and specifications are subject to change without notice.

DIGITAL COMPRESSOR NOMENCLATURE

H	D	H	R	-	030	0	L	S	K	C	D	-	D

SERIES

UNIT TYPE:
- E - Indoor, High Efficiency
- D - Outdoor, High Efficiency

BASE:
- S - Standard
- H - Heavy-Duty

COMPRESSOR TYPE:
- R - Bitzer with Digital Modulation - Motor 1
- T - Bitzer with Digital Modulation - Motor 2
- C - Digital Scrolls
- U - Digital Discus

COMPRESSOR HORSEPOWER:
- 005 - 0.5 HP
- 030 - 3.0 HP
- 100 - 10.0 HP

ALTERNATIVE:
- 0 - Basic
- 1 through 9 - Alternative

APPLICATION (TEMPERATURE RANGE):
- M - Medium
- L - Low

REFRIGERANT:
- S - R-404A
- P - R-507A
- Q - R-407A
- F - R-407F
- T - R-448A
- R - R-449A

VOLTAGE DESIGNATION:
- K - 208-230 V/3 PH/60 HZ
- M - 460 V/3 PH/60 HZ

AIR CONDENSER:
- A - 20 x 32, 3 Row, 1 Fan
- B - 37.5 x 36, 3 Row, 1 Fan
- C - 37.5 x 36, 3 Row, 2 Fan
- D - 37.5 x 36, 4 Row, 2 Fan
- E - 37.5 x 72, 3 Row, 4 Fan
- F - 37.5 x 72, 34 Row, 4 Fan
- H - (2 x) (D Condenser)
- J - 50 x 87, 4 Row, 6 Fan
- K - 37.5 x 42.5, 6 Row, 4 Fan
- X - None

RECEIVER SIZE:
- B - 6" x 18"
- C - 6" x 23"
- D - 6" x 30"
- E - 8.625" x 30"
- F - 10.75" x 30"
- G - 10.75" x 38" (Horizontal only, HD base only)
- H - 12.75" x 30" (Vertical only, Standard base only)
- X - No Receiver

DOE:
- D - DOE / NRCan Compliant
- A - Non-Regulated Applications

Prices, product availability, and specifications are subject to change without notice.

HIGH EFFICIENCY H-SERIES WITH CAPACITY MODULATION PRICING SHEET

STEP 1 - FIND UNIT TO UPGRADE							STEP 2			
TYPE	UPGRADABLE H-SERIES MODEL #	UPGRADE TO	CAPACITY MODULATED H-SERIES MODEL #	CAPACITY MODULATED COMPERSSOR MODEL #	HP	APPLICATION TEMPERATURE	UPGRADE PRICE ADDER 208V/3	UPGRADE PRICE ADDER 460V/3	4 YEAR EXTENDED COMPRESSOR WARRANTY	Updated Extended Warranty
COPELAND DIGITAL RECIPROCATING COMPRESSOR (DISCUS-U)	HDSD-0601L##BC-D	→	HDSU-0601L##BC-D	3DADF28KL	5	LOW	$4,620	$4,867	$10,450	$2,830
	HDSD-0601L##DE-D	→	HDSU-0601L##DE-D	3DADF28KL	5	LOW	$4,498	$5,028	$10,450	$2,830
	HDSD-0750L##DE-D	→	HDSU-0750L##DE-D	3DBDF33KL	5 1/2	LOW	$4,814	$5,357	$10,610	$2,880
	HDSD-0750L##FF-D	→	HDSU-0750L##FF-D	3DBDF33KL	5 1/2	LOW	$5,938	$6,878	$10,610	$2,880
	HDSD-0900L##FF-D	→	HDSU-0900L##FF-D	3DFDF40KL	6	LOW	$5,841	$6,780	$10,970	$3,000
	HDSD-0900L##JH-D	→	HDSU-0900L##JH-D	3DFDF40KL	6	LOW	$6,849	$8,397	$10,970	$3,000
	HDSD-1000L##FF-D	→	HDSU-1000L##FF-D	3DSDF46KL	7	LOW	$5,785	$6,784	$12,170	$3,380
	HDSD-1000L##JH-D	→	HDSU-1000L##JH-D	3DSDF46KL	7	LOW	$6,793	$8,401	$12,170	$3,380
	HDSD-1500L##JH-A	→	HDSU-1500L##JH-A	4DHXF63KL	10	LOW	$7,781	$9,357	$14,480	$4,130
	HDSD-2200L##FF-A	→	HDSU-2200L##FF-A	4DJXF76KL	12 1/2	LOW	$7,482	$8,557	$15,100	$4,330
	HDSD-2200L##JH-A	→	HDSU-2200L##JH-A	4DJXF76KL	12 1/2	LOW	$8,490	$10,174	$15,100	$4,330
	HDSD-0752M##FF-D	→	HDSU-0752M##FF-D	3DADR10ML	7 1/2	MEDIUM	$6,312	$7,311	$10,300	$2,780
	HDSD-0752M##JH-D	→	HDSU-0752M##JH-D	3DADR10ML	7 1/2	MEDIUM	$7,320	$8,928	$10,300	$2,780
	HDSD-1000M##FF-D	→	HDSU-1000M##FF-D	3DBDR12ML	10	MEDIUM	$6,188	$7,177	$11,010	$3,010
	HDSD-1000M##JH-D	→	HDSU-1000M##JH-D	3DBDR12ML	10	MEDIUM	$7,196	$8,804	$11,010	$3,010
	HDSD-1200M##JH-D	→	HDSU-1200M##JH-D	3DFDR15ML	10	MEDIUM	$8,633	$10,189	$11,500	$3,170
	HDSD-1500M##JH-D	→	HDSU-1500M##JH-D	3DSDR17ML	15	MEDIUM	$9,129	$10,679	$11,970	$3,320
Copeland Digital Scroll (Scroll-C)	HDSZ-0300MT#BC-D	→	HDSC-0300MT#BC-D	ZBD21KCE	3	MEDIUM	$6,979	$7,157	$5,810	$1,760
	HDSZ-0300MT#DE-D	→	HDSC-0300MT#DE-D	ZBD21KCE	3	MEDIUM	$6,857	$7,327	$5,810	$1,760
	HDSZ-0400MT#BC-D	→	HDSC-0400MT#BC-D	ZBD30KCE	4	MEDIUM	$7,019	$7,276	$5,980	$1,920
	HDSZ-0400MT#DE-D	→	HDSC-0400MT#DE-D	ZBD30KCE	4	MEDIUM	$6,897	$7,436	$5,980	$1,920
	HDSZ-0500MT#DE-D	→	HDSC-0500MT#DE-D	ZBD38KCE	5	MEDIUM	$7,200	$7,739	$6,270	$1,920
	HDSZ-0500MT#FF-D	→	HDSC-0500MT#FF-D	ZBD38KCE	5	MEDIUM	$8,352	$9,289	$6,270	$1,920
	HDSZ-0601MT#DE-D	→	HDSC-0601MT#DE-D	ZBD45KCE	6	MEDIUM	NOTE 8	NOTE 8	$6,450	$2,100
	HDSZ-0601MT#FF-D	→	HDSC-0601MT#FF-D	ZBD45KCE	6	MEDIUM	NOTE 8	NOTE 8	$6,450	$2,100
	HDSZ-0751MT#FF-D	→	HDSC-0751MT#FF-D	ZBD57KCE	7 1/2	MEDIUM	NOTE 8	NOTE 8	$6,910	$2,150
	HDSZ-0751MT#JH-D	→	HDSC-0751MT#JH-D	ZBD57KCE	7 1/2	MEDIUM	NOTE 8	NOTE 8	$6,910	$2,150
	HDSZ-1000MT#FF-D	→	HDSC-1000MT#FF-D	ZBD76K5E	10	MEDIUM	$6,181	$7,170	$7,860	$2,660
	HDSZ-1000MT#JH-D	→	HDSC-1000MT#JH-D	ZBD76K5E	10	MEDIUM	$7,189	$8,797	$7,860	$2,660
	HDSZ-1500MT#JH-D	→	HDSC-1500MT#JH-D	ZBD114K5E	15	MEDIUM	$8,394	$10,114	$9,010	$3,070
BITZER RECIPROCATING CMRC – R (MOTOR 1)	HDSE-0400M##FF-D	→	HDSR-0400M##FF-D	4FES-5-2DU	4	MEDIUM	$8,148	$9,088	$7,590	$2,100
	HDSE-0400M##JH-D	→	HDSR-0400M##JH-D	4FES-5-2DU	4	MEDIUM	$9,156	$10,705	$7,590	$2,100
	HDSE-0500M##FF-D	→	HDSR-0500M##FF-D	4EES-6-2DU	5	MEDIUM	$8,166	$9,099	$7,720	$2,140
	HDSE-0500M##JH-D	→	HDSR-0500M##JH-D	4EES-6-2DU	5	MEDIUM	$9,164	$10,726	$7,720	$2,140
	HDSE-0600M##FF-D	→	HDSR-0600M##FF-D	4DES-7-2DU	6	MEDIUM	$8,632	$9,561	$8,540	$2,410
	HDSE-0600M##JH-D	→	HDSR-0600M##JH-D	4DES-7-2DU	6	MEDIUM	$9,630	$11,188	$8,540	$2,410
	HDSE-0650M##FF-D	→	HDSR-0650M##FF-D	4CES-9-2DU	6 1/2	MEDIUM	NOTE 8	NOTE 8	$9,790	$2,820
	HDSE-0650M##JH-D	→	HDSR-0650M##JH-D	4CES-9-2DU	6 1/2	MEDIUM	NOTE 8	NOTE 8	$9,790	$2,820
	HDSE-0700M##FF-D	→	HDSR-0700M##FF-D	4VES-10-2NU	7	MEDIUM	$8,839	$9,776	$10,080	$2,920
	HDSE-0700M##JH-D	→	HDSR-0700M##JH-D	4VES-10-2NU	7	MEDIUM	$9,847	$11,403	$10,080	$2,920
	HDSE-0900M##FF-D	→	HDSR-0900M##FF-D	4TES-12-2NU	9	MEDIUM	$9,764	$10,701	$10,140	$3,190
	HDSE-0900M##JH-D	→	HDSR-0900M##JH-D	4TES-12-2NU	9	MEDIUM	$10,772	$12,328	$10,140	$3,190
	HDSE-1000M##JH-D	→	HDSR-1000M##JH-D	4PES-15-2NU	10	MEDIUM	$10,254	$11,804	$10,370	$3,010
BITZER RECIPROCATING CMRC - T (MOTOR 2)	HDSB-0400L##BC-D	→	HDST-0400L##BC-D	4FES-3-2DU	4	LOW	$7,289	$7,899	$7,440	$2,140
	HDSB-0400L##DE-D	→	HDST-0400L##DE-D	4FES-3-2DU	4	LOW	$7,167	$8,059	$7,440	$2,140
	HDSB-0500L##BC-D	→	HDST-0500L##BC-D	4EES-4-2DU	5	LOW	$7,670	$8,291	$7,940	$2,310
	HDSB-0500L##DE-D	→	HDST-0500L##DE-D	4EES-4-2DU	5	LOW	$7,548	$8,461	$7,940	$2,310
	HDSB-0600L##BC-D	→	HDST-0600L##BC-D	4DES-5-2DU	6	LOW	$7,715	$8,525	$8,360	$2,550
	HDSB-0600L##DE-D	→	HDST-0600L##DE-D	4DES-5-2DU	6	LOW	$7,593	$8,685	$8,360	$2,550
	HDSB-0650L##DE-D	→	HDST-0650L##DE-D	4CES-6-2DU	6 1/2	LOW	$7,812	$8,748	$9,590	$2,890
	HDSB-0700L##BC-D	→	HDST-0700L##BC-D	4VES-7-2NU	7	LOW	$7,715	$8,525	$9,860	$2,980
	HDSB-0700L##DE-D	→	HDST-0700L##DE-D	4VES-7-2NU	7	LOW	$7,593	$8,685	$9,860	$2,980
	HDSB-0900L##BC-D	→	HDST-0900L##BC-D	4TES-9-2NU	9	LOW	$9,046	$10,896	$9,920	$3,000
	HDSB-0900L##DE-D	→	HDST-0900L##DE-D	4TES-9-2NU	9	LOW	$8,924	$8,876	$9,920	$3,000
	HDSB-1000L##DE-D	→	HDST-1000L##DE-D	4PES-12-2NU	10	LOW	$7,726	$8,795	$10,040	$3,040
	HDSB-1200L##FF-D	→	HDST-1200L##FF-D	4NES-14-2NU	12	LOW	$9,389	$10,925	$11,170	$3,430
	HDSB-1200L##JH-D	→	HDST-1200L##JH-D	4NES-14-2NU	12	LOW	$10,397	$12,542	$11,170	$3,430
	HDSB-1400L##FF-D	→	HDST-1400L##FF-D	4JE-15-2NU	14	LOW	$11,060	$12,737	$12,350	$3,860
	HDSB-1400L##JH-D	→	HDST-1400L##JH-D	4JE-15-2NU	14	LOW	$12,068	$14,354	$12,350	$3,860
	HDSB-1600L##FF-D	→	HDST-1600L##FF-D	4HE-18-2NU	16	LOW	$12,056	$13,116	$13,070	$4,120
	HDSB-1600L##JH-D	→	HDST-1600L##JH-D	4HE-18-2NU	16	LOW	$13,014	$14,693	$13,070	$4,120

NOTES		
	1	ALL PRICING ADDERS ARE ESTIMATIONS AND ARE SUBJECTED TO CHANGE. FOR MORE ACCURATE PRICING CONTACT AN APPLICATION ENGINEER, SALES OR USE CPQ QUOTING SOFTWARE.
	2	BASE PRICING CAN BE FOUND IN THE KRACK PRICING TABLES
	3	FOR OTHER OPTIONS AND CONFIGURATIONS, CONTACT AN APPLICATION OR SALES ENGINEER
	4	DISCUS AND BITZERS COMPRESSORS ARE NOT COMPATIBLE WITH THE DIEXEL CONTROLLER
	5	THE ABOVE COST IS ESTIMATED FROM THE FOLLOWING CONDITIONS, LOW TEMP EVAP -20°F @ 95°F AMB @ R448A & MED TEMP EVAP 20°F @ 95°F AMB @ 448A
	6	IF A GLIDED REFRIGERANT AT LOW TEMPERATURE APPLICATION IS CHOSEN, THE PRICING WITH BE HIGHER THAN IF A NONEGLIDED REFRIGERANT IS CHOSEN. THIS IS TO ACCOUNT FOR THE DEMAND COOLING.
	7	THE PRICE ADDER ENCAPSULATED THE COST TO CONVERT A NORMAL H-SERIES TO A CAPACITY MODULATED H-SERIES WITH MAY INCLUDE BUT IS NOT LIMITED TO THE FOLLOWING COMPONENTS. UPGRADED COMPRESSOR, OIL SEPARATOR, OIL REGULATOR, VARIABLE FREQUENCY MOTORS FOR CONDENSER, DEMAND COOLING AND VIBRATION ELIMINATORS.
	8	FOR PRICING CONTACT AN APPLICATION ENGINEER, SALES OR USE CPQ QUOTING SOFTWARE

Prices, product availability, and specifications are subject to change without notice.

HIGH EFFICIENCY H-SERIES WITH CAPACITY MODULATION PRICING SHEET *continued*

STEP 3 - CONTROLLER PRICE ADDER		
CoreLink COST ADDER	Dixell COST ADDER (NOTE 1)	KE2 COST ADDER
$4,945	$4,361	$6,128

DIRECTIONS

STEP 1- FIND UNIT TO UPGRADE
NOT ALL UNITS ARE UPGRADABLE SO YOU MUST CHOOSE A UNIT TO UPGRADE FROM THE "UPGRADABLE H-SERIES MODEL #" COLUMN.

STEP 2 - ADD UPGRADE PRICE ADDER
THERE IS A PRICE ASSOCIATED WITH UPGRADING THE H-SERIES TO HAVE CAPACITY MODULATION CAPABILITY.
YOU MUST ADD THE "UPGRADE PRICE ADDER" TO THE BASE PRICE OF YOUR H-SERIES UNIT.

STEP 3 - CONTROLLER PRICE ADDER
NOW YOU MUST PICK A CONTROLLER AND ADD THE CORRESPONDING "CONTROLLER PRICE ADDER" TO THE BASE PRICE.

DIRECTIONS - EXAMPLE

LET'S UPGRADE **HDSB-0400LTKBC-D** TO HAVE CAPACITY MODULATION.
THE UNIT IS A 208 VOLT, 3 PHASE. THIS INFORMATION CAN BE OBTAINED FROM THE 11TH CHARACTER IN THE MODEL NUMBER "K". FOR MORE INFORMATION ON HOW THE NOMENCLATURE OF A H-SERIES WORKS, SEE THE TECHNICAL BULLETIN ON THE KRACK WEBSITE OR THERE IS A NOMENCLATURE DIAGRAM AT THE BEGINNING OF THE H-SERIES PRICING.

THE BASE PRICE OF THIS UNIT IS $12,460 (FROM KRACK PRICE LIST)

STEP 1 -
LOOK AT THE "UPGRADABLE H-SERIES MODEL #" AND FIND THE MODEL NUMBER WHERE THE FIRST 9 AND LAST 3 NUMBERS MATCH,
WHICH WOULD BE **HDSB-0400L##BC-D**. THE UPGRADED UNIT MODEL NUMBER IS JUST TO THE RIGHT (FOLLOW THE ARROW) **HDST-0400L##BC-D**.
REPLACING THE "#" SYMBOLS WITH THE CORRESPONDING VALUES, IN THIS CASE "TK" WILL GET YOU THE CAPACITY MODULATED H-SERIES CONDENSING UNIT MODEL NUMBER,
IN THIS CASE **HDST-0400LTKBC-D.**

STEP 2 -
ADD UPGRADE PRICE ADDER, THEN ADD THE CORRESPONDING "UPGRADE COST ADDER" = $12,460 + $7,289 = $19,749

STEP 3 -
CONTROLLER PRICE ADDER; PICK A CONTROLLER THEN ADD THE PRICE KE2 = $6,128 PRICE; THEREFORE $19,749 + $6,128 = $25,877

ESTIMATED FINAL PRICE WOULD BE: HDST-0400LTKBC-D WITH KE2 = $25,877

Prices, product availability, and specifications are subject to change without notice.

LARGE AIR-COOLED CONDENSING UNIT CONTROL PANEL NOMENCLATURE

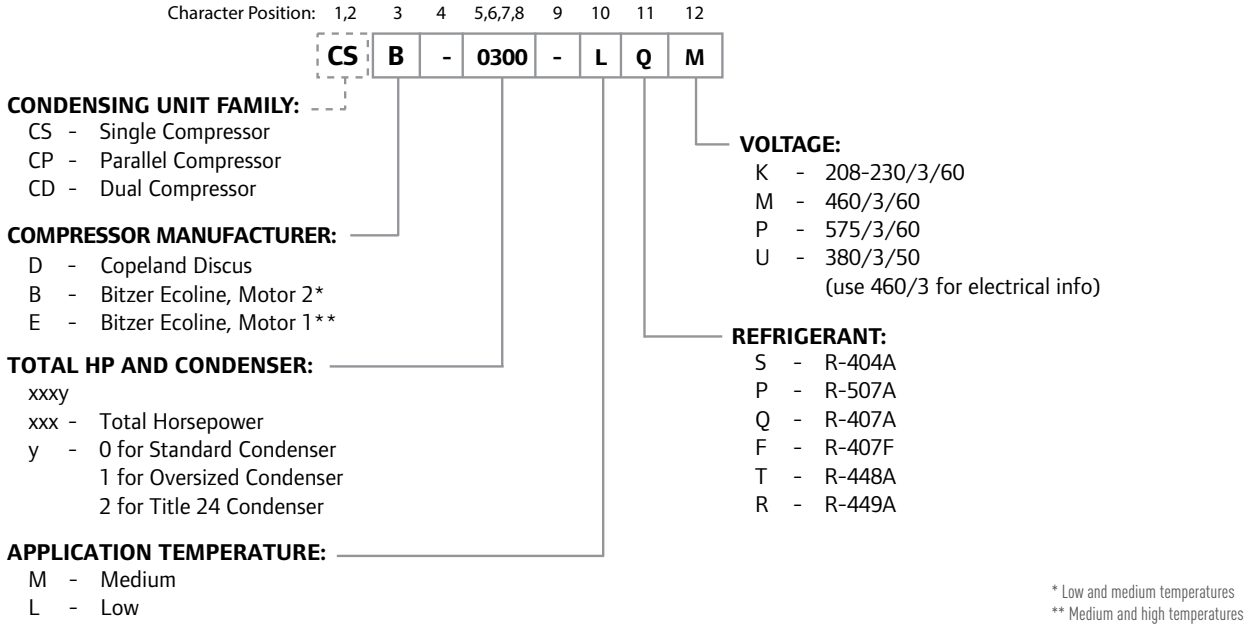

STANDARD FEATURES

- Replaceable Core Liquid Line Filter Drier and Sight Glass
- Encapsulated High Pressure Cutout
- CoreSense Electronic Oil Pressure Control for Discus Compressors
- Adjustable Low Pressure Control
- 230 V Control Circuit (with Transformer as Required)
- Adjustable Low Ambient Head Pressure Control Valve
- Oversized Condenser (Models Pre-Engineered)
- Suction Accumulator Standard on Low Temperature Models
- 1.5 HP, 1140 RPM Fan Motors

OPTIONAL FEATURES

- Pressure Fan Cycling
- Sealed Suction Filter
- Replaceable Core Suction Filter
- 115 V Control Voltage with Transformer
- Oil Separator System (to Activate Flow of Oil and Required for Room Temperatures -10° F and Below)
- Suction Accumulator (Medium / High Temperature). Recommended for Multiple Evaporators and Variable Load Applications.
- Heated and Insulated Receiver
- Mounted Non-Fused Disconnect with Interlock
- Electric Defrost Control Options including Defrost Time Clock, Evaporator Fan Motor, and Defrost Heater Contactors
- Air Defrost Timer
- Shipped Loose Fused Disconnect (Fuses Not Included)
- Cylinder Unloading for Compressors (Where Available)
- Inverter Duty Suitable Fan Motors for 'K' and 'M' Voltages (Requires Power Block for VFD Option)
- Alternate Fin Materials (i.e., Vinyl and Copper for Adverse Environmental Conditions)
- Condenser Access / Clean Out Doors
- Hurricane-Rated Kits

Prices, product availability, and specifications are subject to change without notice.

LARGE AIR-COOLED CONDENSING UNIT PRODUCT DESCRIPTION

Version: August 2025

CSD - SINGLE COMPRESSOR MODELS WITH COPELAND DISCUS COMPRESSORS

SINGLE COMPRESSOR UNITS WITH ONE REFRIGERANT and ELECTRICAL CIRCUIT

STANDARD CONDENSER	COMPRESSOR MODEL	95° F AMBIENT CAPACITY (MBH)		BASE UNIT LIST PRICE			SUCTION FILTER		OPTIONS				4 YEAR EXTENDED COMPRESSOR WARRANTY	STD RECEIVER SIZE	DIMENSIONS (IN)			SHIP WGT (LB)
MODEL	COPELAND DISCUS	@ +25° F Evap	@ -20° F Evap	230V (K)	460V (M)	575V (P)	SEALED	REPLACEABLE CORE	SUCTION ACCUMULATOR	OIL SEPARATOR	PRESSURE FAN CYCLING	HEATED AND INSULATED RECEIVER			L	W	H	
CSD-0100MS	3DB3R12ME	107.5	-	$22,290	$22,870	$23,350	$1,100	$1,670	$1,810	$3,270	N/A	$2,090	$3,120	B	92.00	45.25	51.50	1,564
CSD-0150MS	3DS3R17ME	144.4	-	$24,800	$25,480	$26,040	$1,100	$1,670	$1,810	$3,270	$1,080	$2,090	$3,120	B	146.00	45.25	51.50	1,834
CSD-0200MS	4DBNR20ME	173.7	-	$28,010	$28,930	$29,540	$1,100	$1,670	$1,810	$3,270	$1,080	$2,090	$5,190	B	146.00	45.25	51.50	1,882
CSD-0250MS	4DHNR22ME	193.5	-	$34,040	$33,810	$35,730	$1,100	$1,670	$1,810	$3,270	$1,080	$2,220	$5,790	C	146.00	45.25	51.50	2,002
CSD-0300MS	4DJNR28ME	229.8	-	$42,170	$43,180	$44,080	$1,100	$1,670	$1,810	$3,270	$1,080	$2,280	$6,600	D	146.00	45.25	51.50	2,106
CSD-0350MS	6DHNR35ME	280.1	-	$48,020	$49,080	$50,130	$1,100	$1,670	$1,810	$3,350	$1,720	$2,350	$6,670	E	200.00	45.25	51.50	2,511
CSD-0400MS*	6DJNR40ME	340.6	-	$52,510	$53,610	$54,760	$1,100	$1,670	$2,330	$3,350	$1,720	$2,350	$7,400	E	200.00	45.25	51.50	2,820
CSD-0150LQ*	4DHNF63KE	-	64.7	$33,780	$34,670	$35,400	$1,100	$1,670	INCLUDED	$3,270	N/A	$2,090	$4,530	B	92.00	45.25	51.50	1,639
CSD-0220LQ	4DJNF76KE	-	78.5	$37,120	$38,160	$38,970	$1,100	$1,670	INCLUDED	$3,350	$1,080	$2,090	$4,530	B	146.00	45.25	51.50	1,885
CSD-0270LQ	6DHNF93KE	-	96.0	$43,320	$43,190	$44,110	$1,100	$1,670	INCLUDED	$3,350	$1,080	$2,090	$5,790	C	146.00	45.25	51.50	2,044
CSD-0300LQ	6DJNF11ME	-	115.5	$47,900	$48,300	$49,320	$1,100	$1,670	INCLUDED	$3,350	$1,080	$2,090	$6,600	C	146.00	45.25	51.50	2,069
CSD-0150LS*	4DHNF63KE	-	71.1	$32,310	$32,450	$33,120	$1,100	$1,670	INCLUDED	$3,270	N/A	$2,090	$4,530	B	92.00	45.25	51.50	1,639
CSD-0220LS	4DJNF76KE	-	86.3	$35,680	$35,750	$36,520	$1,100	$1,670	INCLUDED	$3,350	$1,080	$2,090	$4,530	B	146.00	45.25	51.50	1,890
CSD-0270LS	6DHNF93KE	-	107.9	$41,530	$41,670	$42,560	$1,100	$1,670	INCLUDED	$3,350	$1,080	$2,220	$5,790	C	146.00	45.25	51.50	2,056
CSD-0300LS	6DJNF11ME	-	120.3	$46,030	$47,030	$48,010	$1,100	$1,670	INCLUDED	$3,350	$1,080	$2,220	$6,600	C	146.00	45.25	51.50	2,170

OVERSIZED CONDENSER	COMPRESSOR MODEL	95° F AMBIENT CAPACITY (MBH)		BASE UNIT LIST PRICE			SUCTION FILTER		OPTIONS				4 YEAR EXTENDED COMPRESSOR WARRANTY	STD RECEIVER SIZE	DIMENSIONS (IN)			SHIP WGT (LB)
MODEL	COPELAND DISCUS	@ +25° F Evap	@ -20° F Evap	230V (K)	460V (M)	575V (P)	SEALED	REPLACEABLE CORE	SUCTION ACCUMULATOR	OIL SEPARATOR	PRESSURE FAN CYCLING	HEATED AND INSULATED RECEIVER			L	W	H	
CSD-0101MS	3DB3R12ME	111.0	-	$25,500	$26,110	$26,680	$1,100	$1,670	$1,810	$3,270	$1,080	$2,090	$3,120	B	146.00	45.25	51.50	1,845
CSD-0151MS	3DS3R17ME	148.7	-	$26,610	$27,300	$27,890	$1,100	$1,670	$1,810	$3,270	$1,080	$2,220	$3,120	C	146.00	45.25	51.50	1,930
CSD-0201MS	4DBNR20ME	180.3	-	$29,820	$30,740	$31,400	$1,100	$1,670	$1,810	$3,270	$1,080	$2,220	$5,190	C	146.00	45.25	51.50	1,979
CSD-0251MS	4DHNR22ME	203.8	-	$38,510	$39,440	$40,310	$1,100	$1,670	$1,810	$3,270	$1,720	$2,280	$5,790	D	200.00	45.25	51.50	2,511
CSD-0301MS	4DJNR28ME	239.7	-	$44,840	$45,850	$46,830	$1,100	$1,670	$1,810	$3,270	$1,720	$2,350	$6,600	E	200.00	45.25	51.50	2,584
CSD-0351MS	6DHNR35ME	304.5	-	$56,160	$57,210	$58,430	$1,100	$1,670	$1,810	$3,350	$1,080	$2,350	$6,670	E	146.00	90.50	51.50	3,099
CSD-0401MS	6DJNR40ME	354.2	-	$57,520	$58,650	$59,880	$1,100	$1,670	$2,330	$3,350	$1,080	$2,450	$7,400	F	146.00	90.50	51.50	3,380
CSD-0151LQ	4DHNF63KE	-	65.8	$35,310	$36,230	$37,000	$1,100	$1,670	INCLUDED	$3,270	$1,080	$2,090	$4,530	B	146.00	45.25	51.50	1,934
CSD-0221LQ	4DJNF76KE	-	80.4	$38,930	$39,970	$40,800	$1,100	$1,670	INCLUDED	$3,350	$1,080	$2,090	$4,530	C	146.00	45.25	51.50	1,947
CSD-0271LQ	6DHNF93KE	-	97.4	$45,080	$44,950	$45,900	$1,100	$1,670	INCLUDED	$3,350	$1,720	$2,090	$5,790	C	200.00	45.25	51.50	2,427
CSD-0301LQ	6DJNF11ME	-	117.2	$52,380	$52,760	$53,900	$1,100	$1,670	INCLUDED	$3,350	$1,720	$2,220	$6,600	D	200.00	45.25	51.50	2,580
CSD-0151LS	4DHNF63KE	-	73.1	$33,870	$33,980	$34,700	$1,100	$1,670	INCLUDED	$3,270	$1,080	$2,090	$4,530	B	146.00	45.25	51.50	1,934
CSD-0221LS	4DJNF76KE	-	88.3	$37,490	$37,560	$38,370	$1,100	$1,670	INCLUDED	$3,350	$1,080	$2,220	$4,530	C	146.00	45.25	51.50	1,987
CSD-0271LS	6DHNF93KE	-	109.4	$43,300	$43,420	$44,350	$1,100	$1,670	INCLUDED	$3,350	$1,720	$2,220	$5,790	C	200.00	45.25	51.50	2,439
CSD-0301LS	6DJNF11ME	-	123.4	$48,690	$49,690	$50,730	$1,100	$1,670	INCLUDED	$3,350	$1,720	$2,220	$6,600	D	200.00	45.25	51.50	2,617

STANDARD CONDENSER	COMPRESSOR MODEL	95° F AMBIENT CAPACITY (MBH)		BASE UNIT LIST PRICE			SUCTION FILTER		OPTIONS				4 YEAR EXTENDED COMPRESSOR WARRANTY	STD RECEIVER SIZE	DIMENSIONS (IN)			SHIP WGT (LB)
MODEL	COPELAND DISCUS	@ +25° F Evap	@ -20° F Evap	230V (K)	460V (M)	575V (P)	SEALED	REPLACEABLE CORE	SUCTION ACCUMULATOR	OIL SEPARATOR	PRESSURE FAN CYCLING	HEATED AND INSULATED RECEIVER			L	W	H	
CSD-0102MS	3DB3R12ME	109.7	-	$22,480	$23,060	$23,540	$1,100	$1,670	$1,810	$3,270	N/A	$2,090	$3,120	B	92.00	45.25	51.50	1,594
CSD-0152MS	3DS3R17ME	151.7	-	$27,640	$28,330	$28,890	$1,100	$1,670	$1,810	$3,270	$1,080	$2,090	$3,120	C	146.00	45.25	51.50	1,951
CSD-0202MS	4DBNR20ME	183.9	-	$30,850	$31,760	$32,380	$1,100	$1,670	$1,810	$3,270	$1,080	$2,090	$5,190	D	146.00	45.25	51.50	1,999
CSD-0252MS	4DHNR22ME	197.4	-	$36,300	$36,070	$37,990	$1,100	$1,670	$1,810	$3,270	$1,080	$2,220	$5,790	D	146.00	45.25	51.50	2,061
CSD-0302MS	4DJNR28ME	232.1	-	$44,120	$45,120	$46,030	$1,100	$1,670	$1,810	$3,270	$1,080	$2,280	$6,600	D	146.00	45.25	51.50	2,152
CSD-0352MS	6DHNR35ME	285.7	-	$50,620	$51,680	$52,730	$1,100	$1,670	$1,810	$3,350	$1,720	$2,350	$6,670	E	200.00	45.25	51.50	2,600
CSD-0222LQ	4DJNF76KE	-	82.0	$39,950	$40,990	$41,800	$1,100	$1,670	INCLUDED	$3,350	$1,080	$2,090	$4,530	C	146.00	45.25	51.50	2,002
CSD-0272LQ	6DHNF93KE	-	98.0	$45,580	$45,440	$46,370	$1,100	$1,670	INCLUDED	$3,350	$1,080	$2,090	$5,790	C	146.00	45.25	51.50	2,103
CSD-0302LQ	6DJNF11ME	-	116.6	$50,170	$50,560	$51,580	$1,100	$1,670	INCLUDED	$3,350	$1,080	$2,090	$6,600	D	146.00	45.25	51.50	2,128
CSD-0222LS	4DJNF76KE	-	90.1	$38,510	$38,590	$39,350	$1,100	$1,670	INCLUDED	$3,350	$1,080	$2,090	$5,190	C	146.00	45.25	51.50	2,007
CSD-0272LS	6DHNF93KE	-	110.1	$43,790	$43,930	$44,810	$1,100	$1,670	INCLUDED	$3,350	$1,080	$2,220	$5,790	C	146.00	45.25	51.50	2,115
CSD-0302LS	6DJNF11ME	-	122.7	$48,290	$49,300	$50,260	$1,100	$1,670	INCLUDED	$3,350	$1,080	$2,220	$6,600	D	146.00	45.25	51.50	2,229

MS - Medium Temperature, R-404A Models Would Be Selected for R-407A (MQ), R-448A (MT), R-449A (MR), R-407F (MF), or R-507A (MP).

LQ - Low Temperature, R-407A Models Would Be Selected for Applications with R-448A (LT), R-449A (LR), or R-407F (LF) and Include Liquid Injection for Discharge Temperature Control.

LS - Low Temperature, R-404A Models Would Be Selected for Applications with R-507A (LP), and Would NOT Include Liquid Injection for Discharge Temperature Control.

Model Numbers with "2" Before the L or M Temperature Range Designation or an "*" at the end have a condenser that meets California Title 24 efficiency requirements.

Prices, product availability, and specifications are subject to change without notice.

LARGE AIR-COOLED CONDENSING UNIT PRODUCT DESCRIPTION

Version: August 2025

CSB - SINGLE COMPRESSOR MODELS WITH BITZER ECOLINE COMPRESSORS *(Motor 2)*

SINGLE COMPRESSOR UNITS WITH ONE REFRIGERANT AND ELECTRICAL CIRCUIT

STANDARD CONDENSER	COMPRESSOR MODEL	95° F AMBIENT CAPACITY (MBH)		BASE UNIT LIST PRICE			SUCTION FILTER		OPTIONS				4 YEAR EXTENDED COMPRESSOR WARRANTY	STD RECEIVER SIZE	DIMENSIONS (IN)			SHIP WGT (LB)
MODEL	BITZER ECOLINE	@ +25° F Evap	@ -20° F Evap	230V (K)	460V (M)	575V (P)	SEALED	REPLACEABLE CORE	SUCTION ACCUMULATOR	OIL SEPARATOR	PRESSURE FAN CYCLING	HEATED AND INSULATED RECEIVER			L	W	H	
CSB-0100MS	4TES-9	106.9	-	$22,290	$22,870	$23,350	$1,100	$1,670	$1,810	$3,270	N/A	$2,090	$3,010	B	92.00	45.25	51.50	1,564
CSB-0150MS	4NES-14	153.7	-	$24,800	$25,480	$26,040	$1,100	$1,670	$1,810	$3,270	$1,080	$2,090	$3,010	B	146.00	45.25	51.50	1,834
CSB-0200MS	4JE-15	170.4	-	$29,110	$30,020	$30,630	$1,100	$1,670	$1,810	$3,270	$1,080	$2,090	$4,360	B	146.00	45.25	51.50	1,882
CSB-0250MS	4HE-18	200.8	-	$34,040	$33,810	$35,730	$1,100	$1,670	$1,810	$3,270	$1,080	$2,220	$4,360	C	146.00	45.25	51.50	2,002
CSB-0300MS	4GE-23	231.9	-	$42,170	$43,180	$44,080	$1,100	$1,670	$1,810	$3,270	$1,080	$2,280	$4,360	D	146.00	45.25	51.50	2,106
CSB-0350MS	6HE-28	298.7	-	$48,020	$49,080	$50,130	$1,100	$1,670	$1,810	$3,350	$1,720	$2,350	$6,670	E	200.00	45.25	51.50	2,511
CSB-0400MS*	6GE-34	344.7	-	$52,510	$53,610	$54,760	$1,100	$1,670	$2,330	$3,350	$1,720	$2,350	$7,400	E	200.00	45.25	51.50	2,820
CSB-0150LQ*	4HE-18	-	60.6	$33,780	$34,670	$35,400	$1,100	$1,670	INCLUDED	$3,270	N/A	$2,090	$4,360	B	92.00	45.25	51.50	1,639
CSB-0220LQ	4GE-23	-	72.1	$37,120	$38,160	$38,970	$1,100	$1,670	INCLUDED	$3,350	$1,080	$2,090	$4,360	B	146.00	45.25	51.50	1,885
CSB-0270LQ	6HE-28	-	92.7	$43,320	$43,190	$44,110	$1,100	$1,670	INCLUDED	$3,350	$1,080	$2,090	$5,790	C	146.00	45.25	51.50	2,044
CSB-0300LQ	6GE-34	-	108.8	$47,900	$48,300	$49,320	$1,100	$1,670	INCLUDED	$3,350	$1,080	$2,090	$6,600	C	146.00	45.25	51.50	2,069
CSB-0150LS*	4HE-18	-	65.9	$32,310	$32,450	$33,120	$1,100	$1,670	INCLUDED	$3,270	N/A	$2,090	$4,360	B	92.00	45.25	51.50	1,639
CSB-0220LS	4GE-23	-	78.4	$35,680	$35,750	$36,520	$1,100	$1,670	INCLUDED	$3,350	$1,080	$2,090	$4,360	B	146.00	45.25	51.50	1,890
CSB-0270LS	6HE-28	-	100.8	$41,530	$41,670	$42,560	$1,100	$1,670	INCLUDED	$3,350	$1,080	$2,220	$5,790	C	146.00	45.25	51.50	2,056
CSB-0300LS	6GE-34	-	118.3	$46,030	$47,030	$48,010	$1,100	$1,670	INCLUDED	$3,350	$1,080	$2,220	$6,600	C	146.00	45.25	51.50	2,170

OVERSIZED CONDENSER	COMPRESSOR MODEL	95° F AMBIENT CAPACITY (MBH)		BASE UNIT LIST PRICE			SUCTION FILTER		OPTIONS				4 YEAR EXTENDED COMPRESSOR WARRANTY	STD RECEIVER SIZE	DIMENSIONS (IN)			SHIP WGT (LB)
MODEL	BITZER ECOLINE	@ +25° F Evap	@ -20° F Evap	230V (K)	460V (M)	575V (P)	SEALED	REPLACEABLE CORE	SUCTION ACCUMULATOR	OIL SEPARATOR	PRESSURE FAN CYCLING	HEATED AND INSULATED RECEIVER			L	W	H	
CSB-0101MS	4TES-9	112.8	-	$25,500	$26,110	$26,680	$1,100	$1,670	$1,810	$3,270	$1,080	$2,090	$3,010	B	146.00	45.25	51.50	1,845
CSB-0151MS	4NES-14	159.8	-	$26,610	$27,300	$27,890	$1,100	$1,670	$1,810	$3,270	$1,080	$2,220	$3,010	C	146.00	45.25	51.50	1,930
CSB-0201MS	4JE-15	177.2	-	$30,910	$31,840	$32,490	$1,100	$1,670	$1,810	$3,270	$1,080	$2,220	$4,360	C	146.00	45.25	51.50	1,979
CSB-0251MS	4HE-18	210.1	-	$38,510	$39,440	$40,310	$1,100	$1,670	$1,810	$3,270	$1,720	$2,280	$4,360	D	200.00	45.25	51.50	2,511
CSB-0301MS	4GE-23	238.4	-	$44,840	$45,850	$46,830	$1,100	$1,670	$1,810	$3,270	$1,720	$2,350	$4,360	E	200.00	45.25	51.50	2,584
CSB-0351MS	6HE-28	312.0	-	$56,160	$57,210	$58,430	$1,100	$1,670	$1,810	$3,350	$1,080	$2,350	$6,670	E	146.00	90.50	51.50	3,099
CSB-0401MS	6GE-34	360.0	-	$57,520	$58,650	$59,880	$1,100	$1,670	$2,330	$3,350	$1,080	$2,450	$7,400	F	146.00	90.50	51.50	3,380
CSB-0151LQ	4HE-18	-	62.8	$35,310	$36,230	$37,000	$1,100	$1,670	INCLUDED	$3,270	$1,080	$2,090	$4,360	B	146.00	45.25	51.50	1,934
CSB-0221LQ	4GE-23	-	74.2	$38,930	$39,970	$40,800	$1,100	$1,670	INCLUDED	$3,350	$1,080	$2,090	$4,360	C	146.00	45.25	51.50	1,947
CSB-0271LQ	6HE-28	-	93.7	$45,080	$44,950	$45,900	$1,100	$1,670	INCLUDED	$3,350	$1,720	$2,090	$5,790	C	200.00	45.25	51.50	2,427
CSB-0301LQ	6GE-34	-	111.1	$52,380	$52,760	$53,900	$1,100	$1,670	INCLUDED	$3,350	$1,720	$2,220	$6,600	D	200.00	45.25	51.50	2,580
CSB-0151LS	4HE-18	-	68.3	$33,870	$33,980	$34,700	$1,100	$1,670	INCLUDED	$3,270	$1,080	$2,090	$4,360	B	146.00	45.25	51.50	1,934
CSB-0221LS	4GE-23	-	80.7	$37,490	$37,560	$38,370	$1,100	$1,670	INCLUDED	$3,350	$1,080	$2,220	$4,360	S	146.00	45.25	51.50	1,987
CSB-0271LS	6HE-28	-	101.8	$43,300	$43,420	$44,350	$1,100	$1,670	INCLUDED	$3,350	$1,720	$2,220	$5,790	C	200.00	45.25	51.50	2,439
CSB-0301LS	6GE-34	-	120.8	$48,690	$49,690	$50,730	$1,100	$1,670	INCLUDED	$3,350	$1,720	$2,220	$6,600	D	200.00	45.25	51.50	2,617

STANDARD CONDENSER	COMPRESSOR MODEL	95° F AMBIENT CAPACITY (MBH)		BASE UNIT LIST PRICE			SUCTION FILTER		OPTIONS				4 YEAR EXTENDED COMPRESSOR WARRANTY	STD RECEIVER SIZE	DIMENSIONS (IN)			SHIP WGT (LB)
MODEL	BITZER ECOLINE	@ +25° F Evap	@ -20° F Evap	230V (K)	460V (M)	575V (P)	SEALED	REPLACEABLE CORE	SUCTION ACCUMULATOR	OIL SEPARATOR	PRESSURE FAN CYCLING	HEATED AND INSULATED RECEIVER			L	W	H	
CSB-0102MS	4TES-9	109.0	-	$22,480	$23,060	$23,540	$1,100	$1,670	$1,810	$3,270	N/A	$2,090	$3,010	B	92.00	45.25	51.50	1,594
CSB-0152MS	4NES-14	163.0	-	$27,640	$28,330	$28,890	$1,100	$1,670	$1,810	$3,270	$1,080	$2,090	$3,010	C	146.00	45.25	51.50	1,951
CSB-0202MS	4JE-15	180.7	-	$31,940	$32,850	$33,470	$1,100	$1,670	$1,810	$3,270	$1,080	$2,090	$4,360	D	146.00	45.25	51.50	1,999
CSB-0252MS	4HE-18	204.8	-	$36,300	$36,070	$37,990	$1,100	$1,670	$1,810	$3,270	$1,080	$2,220	$4,360	D	146.00	45.25	51.50	2,061
CSB-0302MS	4GE-23	234.2	-	$44,120	$45,120	$46,030	$1,100	$1,670	$1,810	$3,270	$1,080	$2,280	$4,360	D	146.00	45.25	51.50	2,152
CSB-0352MS	6HE-28	304.7	-	$50,620	$51,680	$52,730	$1,100	$1,670	$1,810	$3,350	$1,720	$2,350	$6,670	E	200.00	45.25	51.50	2,600
CSB-0222LQ	4GE-23	-	75.7	$39,950	$40,990	$41,800	$1,100	$1,670	INCLUDED	$3,350	$1,080	$2,090	$4,360	C	146.00	45.25	51.50	2,002
CSB-0272LQ	6HE-28	-	94.6	$45,580	$45,440	$46,370	$1,100	$1,670	INCLUDED	$3,350	$1,080	$2,090	$5,790	C	146.00	45.25	51.50	2,103
CSB-0302LQ	6GE-34	-	110.5	$50,170	$50,560	$51,580	$1,100	$1,670	INCLUDED	$3,350	$1,080	$2,090	$6,600	D	146.00	45.25	51.50	2,128
CSB-0222LS	4GE-23	-	82.3	$38,510	$38,590	$39,350	$1,100	$1,670	INCLUDED	$3,350	$1,080	$2,090	$4,360	C	146.00	45.25	51.50	2,007
CSB-0272LS	6HE-28	-	102.8	$43,790	$43,930	$44,810	$1,100	$1,670	INCLUDED	$3,350	$1,080	$2,220	$5,790	C	146.00	45.25	51.50	2,115
CSB-0302LS	6GE-34	-	120.1	$48,290	$49,300	$50,260	$1,100	$1,670	INCLUDED	$3,350	$1,080	$2,220	$6,600	D	146.00	45.25	51.50	2,229

MS - Medium Temperature, R-404A Models Would Be Selected for R-407A (MQ), R-448A (MT), R-449A (MR), R-407F (MF), or R-507A (MP).

LQ - Low Temperature, R-407A Models Would Be Selected for Applications with R-448A (LT), R-449A (LR), or R-407F (LF) and Include Liquid Injection for Discharge Temperature Control.

LS - Low Temperature, R-404A Models Would Be Selected for Applications with R-507A (LP), and Would NOT Include Liquid Injection for Discharge Temperature Control.

Model Numbers with "2" Before the L or M Temperature Range Designation or an "*" at the end have a condenser that meets California Title 24 efficiency requirements.

Prices, product availability, and specifications are subject to change without notice.

LARGE AIR-COOLED CONDENSING UNIT PRODUCT DESCRIPTION

Version: August 2025

CSE - SINGLE COMPRESSOR MODELS WITH BITZER ECOLINE COMPRESSORS *(Motor 1)*

SINGLE COMPRESSOR UNITS WITH ONE REFRIGERANT AND ELECTRICAL CIRCUIT

STANDARD CONDENSER	COMPRESSOR MODEL	95° F AMBIENT CAPACITY (MBH)		BASE UNIT LIST PRICE			SUCTION FILTER		OPTIONS				4 YEAR EXTENDED COMPRESSOR WARRANTY	STD RECEIVER SIZE	DIMENSIONS (IN)			SHIP WGT (LB)
MODEL	BITZER ECOLINE	@ +25° F Evap	@ -20° F Evap	230V (K)	460V (M)	575V (P)	SEALED	REPLACEABLE CORE	SUCTION ACCUMULATOR	OIL SEPARATOR	PRESSURE FAN CYCLING	HEATED AND INSULATED RECEIVER			L	W	H	
CSE-0100MS	4TES-12	106.9	-	$22,430	$23,010	$23,490	$1,100	$1,670	$1,810	$3,270	N/A	$2,090	$3,010	B	92.00	45.25	51.50	1,564
CSE-0150MS	4NES-20	153.7	-	$24,940	$25,630	$26,190	$1,100	$1,670	$1,810	$3,270	$1,080	$2,090	$3,010	B	146.00	45.25	51.50	1,834
CSE-0200MS	4JE-22	170.4	-	$29,240	$30,160	$30,780	$1,100	$1,670	$1,810	$3,270	$1,080	$2,090	$4,360	B	146.00	45.25	51.50	1,882
CSE-0250MS	4HE-25	200.8	-	$34,180	$33,950	$35,870	$1,100	$1,670	$1,810	$3,270	$1,080	$2,220	$4,360	C	146.00	45.25	51.50	2,002
CSE-0300MS	4GE-30	231.9	-	$42,320	$43,320	$44,230	$1,100	$1,670	$1,810	$3,270	$1,080	$2,280	$4,360	D	146.00	45.25	51.50	2,106
CSE-0350MS	6HE-35	298.7	-	$48,150	$49,210	$50,260	$1,100	$1,670	$1,810	$3,350	$1,720	$2,350	$6,670	E	200.00	45.25	51.50	2,511
CSE-0400MS*	6GE-40	344.7	-	$52,660	$53,760	$54,890	$1,100	$1,670	$2,330	$3,350	$1,720	$2,350	$7,400	E	200.00	45.25	51.50	2,820
CSE-0150LQ*	4HE-25	-	60.6	$33,920	$34,820	$35,530	$1,100	$1,670	INCLUDED	$3,270	N/A	$2,090	$4,360	B	92.00	45.25	51.50	1,639
CSE-0220LQ	4GE-30	-	72.1	$37,250	$38,290	$39,100	$1,100	$1,670	INCLUDED	$3,350	$1,080	$2,090	$4,360	B	146.00	45.25	51.50	1,885
CSE-0270LQ	6HE-35	-	92.7	$43,460	$43,330	$44,250	$1,100	$1,670	INCLUDED	$3,350	$1,080	$2,090	$5,790	C	146.00	45.25	51.50	2,044
CSE-0300LQ	6GE-40	-	108.8	$48,050	$48,440	$49,460	$1,100	$1,670	INCLUDED	$3,350	$1,080	$2,090	$6,600	C	146.00	45.25	51.50	2,069
CSE-0150LS*	4HE-25	-	65.9	$32,460	$32,580	$33,260	$1,100	$1,670	INCLUDED	$3,270	N/A	$2,090	$4,360	B	92.00	45.25	51.50	1,639
CSE-0220LS	4GE-30	-	78.4	$35,820	$35,890	$36,660	$1,100	$1,670	INCLUDED	$3,350	$1,080	$2,090	$4,360	B	146.00	45.25	51.50	1,890
CSE-0270LS	6HE-35	-	100.8	$41,670	$41,810	$42,690	$1,100	$1,670	INCLUDED	$3,350	$1,080	$2,220	$5,790	C	146.00	45.25	51.50	2,056
CSE-0300LS	6GE-40	-	118.3	$46,170	$47,180	$48,140	$1,100	$1,670	INCLUDED	$3,350	$1,080	$2,220	$6,600	C	146.00	45.25	51.50	2,170

OVERSIZED CONDENSER	COMPRESSOR MODEL	95° F AMBIENT CAPACITY (MBH)		BASE UNIT LIST PRICE			SUCTION FILTER		OPTIONS				4 YEAR EXTENDED COMPRESSOR WARRANTY	STD RECEIVER SIZE	DIMENSIONS (IN)			SHIP WGT (LB)
MODEL	BITZER ECOLINE	@ +25° F Evap	@ -20° F Evap	230V (K)	460V (M)	575V (P)	SEALED	REPLACEABLE CORE	SUCTION ACCUMULATOR	OIL SEPARATOR	PRESSURE FAN CYCLING	HEATED AND INSULATED RECEIVER			L	W	H	
CSE-0101MS	4TES-12	112.8	-	$25,650	$26,250	$26,820	$1,100	$1,670	$1,810	$3,270	$1,080	$2,090	$3,010	B	146.00	45.25	51.50	1,845
CSE-0151MS	4NES-20	159.8	-	$26,750	$27,450	$28,040	$1,100	$1,670	$1,810	$3,270	$1,080	$2,220	$3,010	C	146.00	45.25	51.50	1,930
CSE-0201MS	4JE-22	177.2	-	$31,060	$31,970	$32,630	$1,100	$1,670	$1,810	$3,270	$1,080	$2,220	$4,360	C	146.00	45.25	51.50	1,979
CSE-0251MS	4HE-25	210.1	-	$38,660	$39,590	$40,450	$1,100	$1,670	$1,810	$3,270	$1,720	$2,280	$4,360	D	200.00	45.25	51.50	2,511
CSE-0301MS	4GE-30	238.4	-	$44,980	$45,990	$46,970	$1,100	$1,670	$1,810	$3,270	$1,720	$2,350	$4,360	E	200.00	45.25	51.50	2,584
CSE-0351MS	6HE-35	312.0	-	$56,300	$57,350	$58,580	$1,100	$1,670	$1,810	$3,350	$1,080	$2,350	$6,670	E	146.00	90.50	51.50	3,099
CSE-0401MS	6GE-40	360.0	-	$57,660	$58,790	$60,030	$1,100	$1,670	$2,330	$3,350	$1,080	$2,450	$7,400	F	146.00	90.50	51.50	3,380
CSE-0151LQ	4HE-25	-	62.8	$35,460	$36,360	$37,140	$1,100	$1,670	INCLUDED	$3,270	$1,080	$2,090	$4,360	B	146.00	45.25	51.50	1,934
CSE-0221LQ	4GE-30	-	74.2	$39,070	$40,120	$40,950	$1,100	$1,670	INCLUDED	$3,350	$1,080	$2,090	$4,360	C	146.00	45.25	51.50	1,947
CSE-0271LQ	6HE-35	-	93.7	$45,220	$45,090	$46,040	$1,100	$1,670	INCLUDED	$3,350	$1,720	$2,090	$5,790	C	200.00	45.25	51.50	2,427
CSE-0301LQ	6GE-40	-	111.1	$52,520	$52,910	$54,040	$1,100	$1,670	INCLUDED	$3,350	$1,720	$2,220	$6,600	D	200.00	45.25	51.50	2,580
CSE-0151LS	4HE-25	-	68.3	$34,020	$34,130	$34,850	$1,100	$1,670	INCLUDED	$3,270	$1,080	$2,090	$4,360	B	146.00	45.25	51.50	1,934
CSE-0221LS	4GE-30	-	80.7	$37,630	$37,700	$38,500	$1,100	$1,670	INCLUDED	$3,350	$1,080	$2,220	$4,360	C	146.00	45.25	51.50	1,987
CSE-0271LS	6HE-35	-	101.8	$43,440	$43,560	$44,500	$1,100	$1,670	INCLUDED	$3,350	$1,720	$2,220	$5,790	C	200.00	45.25	51.50	2,439
CSE-0301LS	6GE-40	-	120.8	$48,840	$49,830	$50,860	$1,100	$1,670	INCLUDED	$3,350	$1,720	$2,220	$6,600	D	200.00	45.25	51.50	2,617

STANDARD CONDENSER	COMPRESSOR MODEL	95° F AMBIENT CAPACITY (MBH)		BASE UNIT LIST PRICE			SUCTION FILTER		OPTIONS				4 YEAR EXTENDED COMPRESSOR WARRANTY	STD RECEIVER SIZE	DIMENSIONS (IN)			SHIP WGT (LB)
MODEL	BITZER ECOLINE	@ +25° F Evap	@ -20° F Evap	230V (K)	460V (M)	575V (P)	SEALED	REPLACEABLE CORE	SUCTION ACCUMULATOR	OIL SEPARATOR	PRESSURE FAN CYCLING	HEATED AND INSULATED RECEIVER			L	W	H	
CSE-0102MS	4TES-12	109.0	-	$22,630	$23,210	$23,690	$1,100	$1,670	$1,810	$3,270	N/A	$2,090	$3,010	B	92.00	45.25	51.50	1,594
CSE-0152MS	4NES-20	163.0	-	$27,780	$28,470	$29,020	$1,100	$1,670	$1,810	$3,270	$1,080	$2,090	$3,010	C	146.00	45.25	51.50	1,951
CSE-0202MS	4JE-22	180.7	-	$32,090	$33,000	$33,610	$1,100	$1,670	$1,810	$3,270	$1,080	$2,090	$4,360	D	146.00	45.25	51.50	1,999
CSE-0252MS	4HE-25	204.8	-	$36,440	$36,210	$38,140	$1,100	$1,670	$1,810	$3,270	$1,080	$2,220	$4,360	D	146.00	45.25	51.50	2,061
CSE-0302MS	4GE-30	234.2	-	$44,260	$45,270	$46,170	$1,100	$1,670	$1,810	$3,270	$1,080	$2,280	$4,360	D	146.00	45.25	51.50	2,152
CSE-0352MS	6HE-35	304.7	-	$50,770	$51,830	$52,880	$1,100	$1,670	$1,810	$3,350	$1,720	$2,350	$6,670	E	200.00	45.25	51.50	2,600
CSE-0222LQ	4GE-30	-	75.7	$40,100	$41,140	$41,950	$1,100	$1,670	INCLUDED	$3,350	$1,080	$2,090	$4,360	C	146.00	45.25	51.50	2,002
CSE-0272LQ	6HE-35	-	94.6	$45,720	$45,590	$46,500	$1,100	$1,670	INCLUDED	$3,350	$1,080	$2,090	$5,790	C	146.00	45.25	51.50	2,103
CSE-0302LQ	6GE-40	-	110.5	$50,310	$50,700	$51,710	$1,100	$1,670	INCLUDED	$3,350	$1,080	$2,090	$6,600	D	146.00	45.25	51.50	2,128
CSE-0222LS	4GE-30	-	82.3	$38,660	$38,730	$39,500	$1,100	$1,670	INCLUDED	$3,350	$1,080	$2,090	$4,360	C	146.00	45.25	51.50	2,007
CSE-0272LS	6HE-35	-	102.8	$43,930	$44,070	$44,960	$1,100	$1,670	INCLUDED	$3,350	$1,080	$2,220	$5,790	C	146.00	45.25	51.50	2,115
CSE-0302LS	6GE-40	-	120.1	$48,430	$49,430	$50,410	$1,100	$1,670	INCLUDED	$3,350	$1,080	$2,220	$6,600	D	146.00	45.25	51.50	2,229

MS - Medium Temperature, R-404A Models Would Be Selected for R-407A (MQ), R-448A (MT), R-449A (MR), R-407F (MF), or R-507A (MP).

LQ - Low Temperature, R-407A Models Would Be Selected for Applications with R-448A (LT), R-449A (LR), or R-407F (LF) and Include Liquid Injection for Discharge Temperature Control.

LS - Low Temperature, R-404A Models Would Be Selected for Applications with R-507A (LP), and Would NOT Include Liquid Injection for Discharge Temperature Control.

Model Numbers with "2" Before the L or M Temperature Range Designation or an "*" at the end have a condenser that meets California Title 24 efficiency requirements.

Prices, product availability, and specifications are subject to change without notice.

LARGE AIR-COOLED CONDENSING UNIT PRODUCT DESCRIPTIONN

Version: August 2025

CDD - DUAL COMPRESSOR MODELS WITH COPELAND DISCUS COMPRESSORS

TWO INDEPENDENT REFRIGERANT and ELECTRICAL CIRCUITS WITH SINGLE POINT POWER FEED

STANDARD CONDENSER	COMPRESSOR MODEL	95° F AMBIENT CAPACITY (MBH)		BASE UNIT LIST PRICE			SUCTION FILTER		OPTIONS				4 YEAR EXTENDED COMPRESSOR WARRANTY	STD RECEIVER SIZE	DIMENSIONS (IN)			SHIP WGT (LBS)
MODEL	COPELAND DISCUS	@ +25° F Evap	@ -20° F Evap	230V (K)	460V (M)	575V (P)	SEALED	REPLACEABLE CORE	SUCTION ACCUMULATOR	OIL SEPARATOR	PRESSURE FAN CYCLING	HEATED AND INSULATED RECEIVER			L	W	H	
CDD-0100MS	(2) 2DC3R53KE	43.2	-	$27,900	$27,900	$28,500	$2,220	$3,500	$3,570	$6,510	N/A	$4,160	$5,010	A	124.75	45.25	51.50	1,748
CDD-0150MS*	(2) 2DL3R78KE	63.7	-	$37,940	$37,940	$38,730	$2,220	$3,500	$3,570	$6,510	N/A	$4,160	$5,010	A	124.75	45.25	51.50	1,839
CDD-0160MS	(2) 2DA3R89KE	73.8	-	$40,770	$40,770	$41,670	$2,220	$3,500	$3,570	$6,510	$1,080	$4,160	$5,010	A	178.75	45.25	51.50	2,378
CDD-0180MS	(2) 3DA3R10ME	87.8	-	$45,090	$45,090	$46,050	$2,220	$3,500	$3,570	$6,510	$1,080	$4,160	$6,240	A	178.75	45.25	51.50	2,533
CDD-0200MS	(2) 3DB3R12ME	105.4	-	$50,950	$50,950	$52,030	$2,220	$3,500	$3,570	$6,510	$1,080	$4,160	$6,240	B	178.75	45.25	51.50	2,660
CDD-0240MS*	(2) 3DF3R15ME	122.4	-	$57,200	$57,200	-	$2,220	$3,500	$3,570	$6,510	$1,080	$4,160	$6,240	B	178.75	45.25	51.50	2,725
CDD-0300MS	(2) 3DS3R17ME	141.0	-	$60,810	$60,810	$62,090	$2,220	$3,500	$3,570	$6,510	$1,720	$4,160	$6,240	B	232.75	45.25	51.50	3,115
CDD-0400MS	(2) 4DBNR20ME	149.7	-	$62,770	$62,770	$63,280	$2,220	$3,500	$3,570	$6,710	$1,720	$4,160	$10,370	B	232.75	45.25	51.50	3,168
CDD-0500MS*	(2) 4DHNR22ME	188.2	-	$73,430	$73,430	$74,170	$2,220	$3,500	$3,570	$6,710	$1,720	$4,410	$11,570	C	232.75	45.25	51.50	3,381
CDD-0600MS*	(2) 4DJNR28ME	229.8	-	$82,850	$82,850	$84,600	$2,220	$3,500	$3,570	$6,710	$1,720	$4,580	$13,220	D	146.00	90.50	51.50	3,776
CDD-0700MS	(2) 6DHNR35ME	280.5	-	$92,560	$92,560	$94,540	$2,220	$3,500	$3,570	$8,390	$3,010	$4,580	$13,340	E	200.00	90.50	51.50	4,319
CDD-0800MS*	(2) 6DJNR40ME	340.7	-	$104,270	$104,270	$106,470	$2,220	$3,500	$4,650	$8,390	$3,010	$4,700	$14,810	E	200.00	90.50	51.50	4,942
CDD-0300LQ*	(2) 4DKNF63KE	-	64.7	$56,300	$56,300	$72,040	$2,220	$3,500	INCLUDED	$6,710	$1,720	$4,160	$8,530	B	178.75	45.25	51.50	2,719
CDD-0440LQ	(2) 4DJNF76KE	-	73.5	$72,670	$72,670	$74,210	$2,220	$3,500	INCLUDED	$6,710	$1,720	$4,160	$9,040	B	232.75	45.25	51.50	3,167
CDD-0540LQ*	(2) 6DHNF93KE	-	91.8	$80,870	$80,870	$82,570	$2,220	$3,500	INCLUDED	$6,710	$1,720	$4,410	$11,570	C	232.75	45.25	51.50	3,452
CDD-0600LQ	(2) 6DJNF11ME	-	109	$88,310	$88,310	$90,170	$2,220	$3,500	INCLUDED	$6,710	$1,720	$4,410	$13,220	C	146.00	90.50	51.50	3,765
CDD-0300LS*	(2) 4DKNF63KE	-	71.1	$58,170	$58,170	$68,570	$2,220	$3,500	INCLUDED	$6,710	$1,720	$4,160	$8,530	B	178.75	45.25	51.50	2,719
CDD-0440LS	(2) 4DJNF76KE	-	85.9	$69,290	$69,290	$70,740	$2,220	$3,500	INCLUDED	$6,710	$1,720	$4,160	$9,040	B	232.75	45.25	51.50	3,179
CDD-0540LS*	(2) 6DHNF93KE	-	106.1	$77,500	$77,500	$79,120	$2,220	$3,500	INCLUDED	$6,710	$1,720	$4,410	$11,570	C	232.75	45.25	51.50	3,477
CDD-0600LS	(2) 6DJNF11ME	-	118.8	$84,920	$84,920	$86,740	$2,220	$3,500	INCLUDED	$6,710	$1,720	$4,410	$13,220	C	146.00	90.50	51.50	3,765

OVERSIZED CONDENSER	COMPRESSOR MODEL	95° F AMBIENT CAPACITY (MBH)		BASE UNIT LIST PRICE			SUCTION FILTER		OPTIONS				4 YEAR EXTENDED COMPRESSOR WARRANTY	STD RECEIVER SIZE	DIMENSIONS (IN)			SHIP WGT (LB)
MODEL	COPELAND DISCUS	@ +25° F Evap	@ -20° F Evap	230V (K)	460V (M)	575V (P)	SEALED	REPLACEABLE CORE	SUCTION ACCUMULATOR	OIL SEPARATOR	PRESSURE FAN CYCLING	HEATED AND INSULATED RECEIVER			L	W	H	
CDD-0101MS*	(2) 2DC3R53KE	44.9	-	$31,210	$31,210	$31,870	$2,220	$3,500	$3,570	$6,510	N/A	$4,160	$5,010	A	124.75	45.25	51.50	1,812
CDD-0151MS	(2) 2DL3R78KE	65.8	-	$39,480	$39,480	$40,340	$2,220	$3,500	$3,570	$6,510	$1,080	$4,160	$5,010	A	178.75	45.25	51.50	2,371
CDD-0161MS	(2) 2DA3R89KE	75.2	-	$42,600	$42,600	$43,520	$2,220	$3,500	$3,570	$6,510	$1,080	$4,160	$5,010	A	178.75	45.25	51.50	2,440
CDD-0181MS*	(2) 3DA3R10ME	90.6	-	$48,710	$48,710	$49,740	$2,220	$3,500	$3,570	$6,510	$1,080	$4,160	$6,240	B	178.75	45.25	51.50	2,729
CDD-0201MS	(2) 3DB3R12ME	108.6	-	$55,410	$55,410	$56,600	$2,220	$3,500	$3,570	$6,510	$1,720	$4,160	$6,240	B	232.75	45.25	51.50	3,077
CDD-0241MS	(2) 3DF3R15ME	125.5	-	$59,850	$59,850	-	$2,220	$3,500	$3,570	$6,510	$1,720	$4,160	$6,240	B	232.75	45.25	51.50	3,079
CDD-0301MS*	(2) 3DS3R17ME	142.2	-	$64,430	$64,430	$65,800	$2,220	$3,500	$3,570	$6,510	$1,720	$4,410	$6,240	C	232.75	45.25	51.50	3,277
CDD-0401MS	(2) 4DBNR20ME	156.8	-	$79,170	$79,170	$80,020	$2,220	$3,500	$3,570	$6,710	$1,720	$4,410	$10,370	C	146.00	90.50	51.50	3,515
CDD-0501MS	(2) 4DHNR22ME	203.8	-	$84,830	$84,830	$86,630	$2,220	$3,500	$3,570	$6,710	$3,010	$4,580	$11,570	D	200.00	90.50	51.50	4,329
CDD-0601MS	(2) 4DJNR28ME	239.7	-	$89,210	$89,210	$91,110	$2,220	$3,500	$3,570	$6,710	$3,010	$4,700	$13,220	E	200.00	90.50	51.50	4,474
CDD-0701MS	(2) 6DHNR35ME	304.5	-	$115,830	$115,830	$118,230	$2,220	$3,500	$3,570	$8,390	$4,290	$4,700	$13,340	E	254.00	90.50	51.50	5,329
CDD-0801MS	(2) 6DJNR40ME	354.2	-	$118,660	$118,660	$121,130	$2,220	$3,500	$4,650	$8,390	$4,290	$4,870	$14,810	F	254.00	90.50	51.50	5,895
CDD-0301LQ	(2) 4DKNF63KE		67.8	$63,850	$63,850	$74,340	$2,220	$3,500	INCLUDED	$6,710	$1,720	$4,160	$8,530	B	232.75	45.25	51.50	3,212
CDD-0441LQ*	(2) 4DJNF76KE	-	74.0	$76,270	$76,270	$77,890	$2,220	$3,500	INCLUDED	$6,710	$1,720	$4,410	$9,040	C	232.75	45.25	51.50	3,261
CDD-0541LQ*	(2) 6DHNF93KE	-	93.7	$85,900	$85,900	$87,710	$2,220	$3,500	INCLUDED	$6,710	$1,720	$4,410	$11,570	C	146.00	90.50	51.50	3,831
CDD-0601LQ	(2) 6DJNF11ME	-	111.6	$98,810	$98,810	$100,910	$2,220	$3,500	INCLUDED	$6,710	$3,010	$4,410	$13,220	D	200.00	90.50	51.50	4,452
CDD-0301LS	(2) 4DKNF63KE		75.3	$60,470	$60,470	$70,860	$2,220	$3,500	INCLUDED	$6,710	$1,720	$4,160	$8,530	B	232.75	45.25	51.50	3,212
CDD-0441LS*	(2) 4DJNF76KE	-	88.3	$73,790	$73,790	$75,370	$2,220	$3,500	INCLUDED	$6,710	$1,720	$4,410	$9,040	C	232.75	45.25	51.50	3,261
CDD-0541LS*	(2) 6DHNF93KE	-	109.0	$82,510	$82,510	$84,250	$2,220	$3,500	INCLUDED	$6,710	$1,720	$4,410	$11,570	C	146.00	90.50	51.50	3,788
CDD-0601LS	(2) 6DJNF11ME	-	123.4	$95,400	$95,400	$97,450	$2,220	$3,500	INCLUDED	$6,710	$3,010	$4,410	$13,220	D	200.00	90.50	51.50	4,527

OVERSIZED CONDENSER	COMPRESSOR MODEL	95° F AMBIENT CAPACITY (MBH)		BASE UNIT LIST PRICE			SUCTION FILTER		OPTIONS				4 YEAR EXTENDED COMPRESSOR WARRANTY	STD RECEIVER SIZE	DIMENSIONS (IN)			SHIP WGT (LB)
MODEL	COPELAND DISCUS	@ +25° F Evap	@ -20° F Evap	230V (K)	460V (M)	575V (P)	SEALED	REPLACEABLE CORE	SUCTION ACCUMULATOR	OIL SEPARATOR	PRESSURE FAN CYCLING	HEATED AND INSULATED RECEIVER			L	W	H	
CDD-0162MS	(2) 2DA3R89KE	73.8	-	$43,620	$43,620	$44,510	$2,220	$3,500	$3,570	$6,510	$1,080	$4,160	$5,010	A	178.75	45.25	51.50	2,495
CDD-0202MS	(2) 3DB3R12ME	105.4	-	$53,200	$53,200	$54,290	$2,220	$3,500	$3,570	$6,510	$1,080	$4,160	$6,240	B	178.75	45.25	51.50	2,719
CDD-0402MS	(2) 4DBNR20ME	149.7	-	$65,370	$65,370	$65,890	$2,220	$3,500	$3,570	$6,710	$1,720	$4,160	$10,370	C	232.75	45.25	51.50	3,256
CDD-0702MS	(2) 6DHNR35ME	280.5	-	$97,790	$97,790	$99,770	$2,220	$3,500	$3,570	$8,390	$3,010	$4,580	$13,340	E	200.00	90.50	51.50	4,494
CDD-0602LQ	(2) 6DJNF11ME	-	109.0	$92,820	$92,820	$94,690	$2,220	$3,500	INCLUDED	$6,710	$1,720	$4,410	$13,220	C	146.00	90.50	51.50	3,895
CDD-0602LS	(2) 6DJNF11ME	-	118.8	$89,440	$89,440	$91,250	$2,220	$3,500	INCLUDED	$6,710	$1,720	$4,410	$13,220	C	146.00	90.50	51.50	3,895

MS - Medium Temperature, R-404A Models Would Be Selected for R-407A (MQ), R-448A (MT), R-449A (MR), R-407F (MF), or R-507A (MP).

LQ - Low Temperature, R-407A Models Would Be Selected for Applications with R-448A (LT), R-449A (LR), or R-407F (LF) and Include Liquid Injection for Discharge Temperature Control.

LS - Low Temperature, R-404A Models Would Be Selected for Applications with R-507A (LP), and Would NOT Include Liquid Injection for Discharge Temperature Control.

Model Numbers with "2" Before the L or M Temperature Range Designation or an "*" at the end have a condenser that meets California Title 24 efficiency requirements.

Prices, product availability, and specifications are subject to change without notice.

LARGE AIR-COOLED CONDENSING UNIT PRODUCT DESCRIPTION

Version: August 2025

CDB - DUAL COMPRESSOR MODELS WITH BITZER ECOLINE COMPRESSORS *(Motor 2)*

TWO INDEPENDENT REFRIGERANT and ELECTRICAL CIRCUITS WITH SINGLE POINT POWER FEED

STANDARD CONDENSER	COMPRESSOR MODEL	95° F AMBIENT CAPACITY (MBH)		BASE UNIT LIST PRICE			SUCTION FILTER		OPTIONS				4 YEAR EXTENDED COMPRESSOR WARRANTY	STD RECEIVER SIZE	DIMENSIONS (IN)			SHIP WGT (LB)
MODEL	BITZER ECOLINE	@ +25° F Evap	@ -20°F Evap	230V (K)	460V (M)	575V (P)	SEALED	REPLACEABLE CORE	SUCTION ACCUMULATOR	OIL SEPARATOR	PRESSURE FAN CYCLING	HEATED AND INSULATED RECEIVER			L	W	H	
CDB-0100MS	(2) 4FES-3	43.9	-	$27,900	$27,900	$28,500	$2,220	$3,500	$3,570	$6,510	N/A	$4,160	$4,430	A	124.75	45.25	51.50	1,748
CDB-0150MS*	(2) 4EES-4	66.0	-	$37,940	$37,940	$38,730	$2,220	$3,500	$3,570	$6,510	N/A	$4,160	$4,430	A	124.75	45.25	51.50	1,839
CDB-0160MS	(2) 4DES-5	69.3	-	$40,770	$40,770	$41,670	$2,220	$3,500	$3,570	$6,510	$1,080	$4,160	$4,430	A	178.75	45.25	51.50	2,378
CDB-0180MS	(2) 4CES-6	88.5	-	$45,090	$45,090	$46,050	$2,220	$3,500	$3,570	$6,510	$1,080	$4,160	$4,430	A	178.75	45.25	51.50	2,533
CDB-0200MS	(2) 4TES-9	106.9	-	$50,950	$50,950	$52,030	$2,220	$3,500	$3,570	$6,510	$1,080	$4,160	$6,020	B	178.75	45.25	51.50	2,660
CDB-0240MS*	(2) 4PES-12	128.1	-	$57,200	$57,200	$58,420	$2,220	$3,500	$3,570	$6,510	$1,080	$4,160	$6,020	B	178.75	45.25	51.50	2,725
CDB-0300MS	(2) 4NES-14	150.0	-	$60,810	$60,810	$62,090	$2,220	$3,500	$3,570	$6,510	$1,720	$4,160	$6,020	B	232.75	45.25	51.50	3,115
CDB-0400MS	(2) 4JE-15	169.2	-	$62,770	$62,770	$63,280	$2,220	$3,500	$3,570	$6,710	$1,720	$4,160	$8,700	B	232.75	45.25	51.50	3,168
CDB-0500MS*	(2) 4HE-18	195.7	-	$73,430	$73,430	$74,170	$2,220	$3,500	$3,570	$6,710	$1,720	$4,410	$8,700	C	232.75	45.25	51.50	3,381
CDB-0600MS*	(2) 4GE-23	231.9	-	$82,850	$82,850	$84,600	$2,220	$3,500	$3,570	$6,710	$1,720	$4,580	$8,700	D	146.00	90.50	51.50	3,776
CDB-0700MS	(2) 6HE-28	298.7	-	$92,560	$92,560	$94,540	$2,220	$3,500	$3,570	$8,390	$3,010	$4,580	$13,340	E	200.00	90.50	51.50	4,319
CDB-0800MS*	(2) 6GE-34	344.7	-	$104,270	$104,270	$106,470	$2,220	$3,500	$4,650	$8,390	$3,010	$4,700	$14,810	E	200.00	90.50	51.50	4,942
CDB-0300LQ*	(2) 4HE-18		60.6	$66,320	$66,320	$67,880	$2,220	$3,500	INCLUDED	$6,710	$1,720	$4,160	$8,700	B	178.75	45.25	51.50	2,719
CDB-0440LQ	(2) 4GE-23	-	71.7	$72,670	$72,670	$74,210	$2,220	$3,500	INCLUDED	$6,710	$1,720	$4,160	$8,700	B	232.75	45.25	51.50	3,167
CDB-0540LQ*	(2) 6HE-28	-	90.9	$80,870	$80,870	$82,570	$2,220	$3,500	INCLUDED	$6,710	$1,720	$4,410	$11,570	C	232.75	45.25	51.50	3,452
CDB-0600LQ	(2) 6GE-34	-	106.9	$88,310	$88,310	$90,170	$2,220	$3,500	INCLUDED	$6,710	$1,720	$4,410	$13,220	C	146.00	90.50	51.50	3,688
CDB-0300LS*	(2) 4HE-18		65.9	$62,960	$62,960	$64,410	$2,220	$3,500	INCLUDED	$6,710	$1,720	$4,160	$8,700	B	178.75	45.25	51.50	2,719
CDB-0440LS	(2) 4GE-23	-	77.9	$69,290	$69,290	$70,740	$2,220	$3,500	INCLUDED	$6,710	$1,720	$4,160	$8,700	B	232.75	45.25	51.50	3,179
CDB-0540LS*	(2) 6HE-28	-	98.8	$77,500	$77,500	$79,120	$2,220	$3,500	INCLUDED	$6,710	$1,720	$4,410	$11,570	C	232.75	45.25	51.50	3,477
CDB-0600LS	(2) 6GE-34	-	116.2	$84,920	$84,920	$86,740	$2,220	$3,500	INCLUDED	$6,710	$1,720	$4,410	$13,220	C	146.00	90.50	51.50	3,765

OVERSIZED CONDENSER	COMPRESSOR MODEL	95° F AMBIENT CAPACITY (MBH)		BASE UNIT LIST PRICE			SUCTION FILTER		OPTIONS				4 YEAR EXTENDED COMPRESSOR WARRANTY	STD RECEIVER SIZE	DIMENSIONS (IN)			SHIP WGT (LB)
MODEL	BITZER ECOLINE	@ +25° F Evap	@ -20°F Evap	230V (K)	460V (M)	575V (P)	SEALED	REPLACEABLE CORE	SUCTION ACCUMULATOR	OIL SEPARATOR	PRESSURE FAN CYCLING	HEATED AND INSULATED RECEIVER			L	W	H	
CDB-0101MS*	(2) 4FES-3	46.5	-	$31,210	$31,210	$31,870	$2,220	$3,500	$3,570	$6,510	N/A	$4,160	$4,430	A	124.75	45.25	51.50	1,812
CDB-0151MS	(2) 4EES-4	69.3	-	$39,480	$39,480	$40,340	$2,220	$3,500	$3,570	$6,510	$1,080	$4,160	$4,430	A	178.75	45.25	51.50	2,371
CDB-0161MS	(2) 4DES-5	71.0	-	$42,600	$42,600	$43,520	$2,220	$3,500	$3,570	$6,510	$1,080	$4,160	$4,430	A	178.75	45.25	51.50	2,440
CDB-0181MS*	(2) 4CES-6	92.9	-	$48,710	$48,710	$49,740	$2,220	$3,500	$3,570	$6,510	$1,080	$4,160	$4,430	B	178.75	45.25	51.50	2,729
CDB-0201MS	(2) 4TES-9	112.2	-	$55,410	$55,410	$56,600	$2,220	$3,500	$3,570	$6,510	$1,720	$4,160	$6,020	B	232.75	45.25	51.50	3,077
CDB-0241MS	(2) 4PES-12	131.8	-	$59,850	$59,850	$61,130	$2,220	$3,500	$3,570	$6,510	$1,720	$4,160	$6,020	B	232.75	45.25	51.50	3,079
CDB-0301MS*	(2) 4NES-14	152.7	-	$66,610	$66,610	$67,990	$2,220	$3,500	$3,570	$6,510	$1,720	$4,410	$6,020	C	232.75	45.25	51.50	3,277
CDB-0401MS	(2) 4JE-15	177.2	-	$79,170	$79,170	$80,020	$2,220	$3,500	$3,570	$6,710	$1,720	$4,410	$8,700	C	146.00	90.50	51.50	3,515
CDB-0501MS	(2) 4HE-18	210.1	-	$84,830	$84,830	$86,630	$2,220	$3,500	$3,570	$6,710	$3,010	$4,580	$8,700	D	200.00	90.50	51.50	4,329
CDB-0601MS	(2) 4GE-23	238.4	-	$89,210	$89,210	$91,110	$2,220	$3,500	$3,570	$6,710	$3,010	$4,700	$8,700	E	200.00	90.50	51.50	4,474
CDB-0701MS	(2) 6HE-28	312.0	-	$115,830	$115,830	$118,230	$2,220	$3,500	$3,570	$8,390	$4,290	$4,700	$13,340	E	254.00	90.50	51.50	5,329
CDB-0801MS	(2) 6GE-34	360.0	-	$118,660	$118,660	$121,130	$2,220	$3,500	$4,650	$8,390	$4,290	$4,870	$14,810	F	254.00	90.50	51.50	5,895
CDB-0301LQ	(2) 4HE-18		64.7	$68,530	$68,530	$77,890	$2,220	$3,500	INCLUDED	$6,710	$1,720	$4,410	$8,700	B	232.75	45.25	51.50	3,212
CDB-0441LQ*	(2) 4GE-23	-	74.2	$76,270	$76,270	$77,890	$2,220	$3,500	INCLUDED	$6,710	$1,720	$4,410	$8,700	C	232.75	45.25	51.50	3,261
CDB-0541LQ*	(2) 6HE-28	-	94.2	$85,900	$85,900	$87,710	$2,220	$3,500	INCLUDED	$6,710	$1,720	$4,410	$11,570	C	146.00	90.50	51.50	3,831
CDB-0601LQ	(2) 6GE-34	-	111.1	$98,810	$98,810	$100,910	$2,220	$3,500	INCLUDED	$6,710	$3,010	$4,410	$13,220	D	200.00	90.50	51.50	4,452
CDB-0301LS	(2) 4HE-18		70.3	$65,260	$65,260	$66,710	$2,220	$3,500	INCLUDED	$6,710	$1,720	$4,410	$8,700	B	232.75	45.25	51.50	3,212
CDB-0441LS*	(2) 4GE-23	-	80.7	$73,790	$73,790	$75,370	$2,220	$3,500	INCLUDED	$6,710	$1,720	$4,410	$8,700	C	232.75	45.25	51.50	3,261
CDB-0541LS*	(2) 6HE-28	-	102.4	$82,510	$82,510	$84,250	$2,220	$3,500	INCLUDED	$6,710	$1,720	$4,410	$11,570	C	146.00	90.50	51.50	3,788
CDB-0601LS	(2) 6GE-34	-	120.8	$95,400	$95,400	$97,450	$2,220	$3,500	INCLUDED	$6,710	$3,010	$4,410	$13,220	D	200.00	90.50	51.50	4,527

OVERSIZED CONDENSER	COMPRESSOR MODEL	95° F AMBIENT CAPACITY (MBH)		BASE UNIT LIST PRICE			SUCTION FILTER		OPTIONS				4 YEAR EXTENDED COMPRESSOR WARRANTY	STD RECEIVER SIZE	DIMENSIONS (IN)			SHIP WGT (LB)
MODEL	BITZER ECOLINE	@ +25° F Evap	@ -20°F Evap	230V (K)	460V (M)	575V (P)	SEALED	REPLACEABLE CORE	SUCTION ACCUMULATOR	OIL SEPARATOR	PRESSURE FAN CYCLING	HEATED AND INSULATED RECEIVER			L	W	H	
CDB-0162MS	(2) 4DES-5	72.4	-	$43,620	$43,620	$44,510	$2,220	$3,500	$3,570	$6,510	$1,080	$4,160	$4,430	A	178.75	45.25	51.50	2,495
CDB-0202MS	(2) 4TES-9	109.0	-	$53,200	$53,200	$54,290	$2,220	$3,500	$3,570	$6,510	$1,080	$4,160	$6,020	B	178.75	45.25	51.50	2,719
CDB-0402MS	(2) 4JE-15	172.6	-	$67,560	$67,560	$68,070	$2,220	$3,500	$3,570	$6,710	$1,720	$4,160	$8,700	C	232.75	45.25	51.50	3,256
CDB-0702MS	(2) 6HE-28	304.7	-	$97,790	$97,790	$99,770	$2,220	$3,500	$3,570	$8,390	$3,010	$4,580	$13,340	E	200.00	90.50	51.50	4,494
CDB-0602LQ	(2) 6GE-34	-	109.0	$92,820	$92,820	$94,690	$2,220	$3,500	INCLUDED	$6,710	$1,720	$4,410	$13,220	C	146.00	90.50	51.50	3,895
CDB-0602LS	(2) 6GE-34	-	118.5	$89,440	$89,440	$91,250	$2,220	$3,500	INCLUDED	$6,710	$1,720	$4,410	$13,220	C	146.00	90.50	51.50	3,895

MS - Medium Temperature, R-404A Models Would Be Selected for R-407A (MQ), R-448A (MT), R-449A (MR), R-407F (MF), or R-507A (MP).

LQ - Low Temperature, R-407A Models Would Be Selected for Applications with R-448A (LT), R-449A (LR), or R-407F (LF) and Include Liquid Injection for Discharge Temperature Control.

LS - Low Temperature, R-404A Models Would Be Selected for Applications with R-507A (LP), and Would NOT Include Liquid Injection for Discharge Temperature Control.

Model Numbers with "2" Before the L or M Temperature Range Designation or an "*" at the end have a condenser that meets California Title 24 efficiency requirements.

Prices, product availability, and specifications are subject to change without notice.

LARGE AIR-COOLED CONDENSING UNIT PRODUCT DESCRIPTION

Version: August 2025

CDE - DUAL COMPRESSOR MODELS WITH BITZER ECOLINE COMPRESSORS *(Motor 1)*

TWO INDEPENDENT REFRIGERANT and ELECTRICAL CIRCUITS WITH SINGLE POINT POWER FEED

STANDARD CONDENSER	COMPRESSOR MODEL	95° F AMBIENT CAPACITY (MBH)		BASE UNIT LIST PRICE			SUCTION FILTER		OPTIONS				4 YEAR EXTENDED COMPRESSOR WARRANTY	STD RECEIVER SIZE	DIMENSIONS (IN)			SHIP WGT (LB)
MODEL	BITZER ECOLINE	@ +25° F Evap	@ -20° F Evap	230V (K)	460V (M)	575V (P)	SEALED	REPLACEABLE CORE	SUCTION ACCUMULATOR	OIL SEPARATOR	PRESSURE FAN CYCLING	HEATED AND INSULATED RECEIVER			L	W	H	
CDE-0100MS	(2) 4FES-5	43.9	-	$28,170	$28,170	$28,770	$2,220	$3,500	$3,570	$6,510	N/A	$4,160	$4,430	A	124.75	45.25	51.50	1,748
CDE-0150MS*	(2) 4EES-6	66.0	-	$38,210	$38,210	$39,010	$2,220	$3,500	$3,570	$6,510	N/A	$4,160	$4,430	A	124.75	45.25	51.50	1,839
CDE-0160MS	(2) 4DES-7	69.3	-	$41,040	$41,040	$41,950	$2,220	$3,500	$3,570	$6,510	$1,080	$4,160	$4,430	A	178.75	45.25	51.50	2,378
CDE-0180MS	(2) 4CES-9	88.5	-	$45,360	$45,360	$46,330	$2,220	$3,500	$3,570	$6,510	$1,080	$4,160	$5,630	A	178.75	45.25	51.50	2,533
CDE-0200MS	(2) 4TES-12	106.9	-	$51,220	$51,220	$52,300	$2,220	$3,500	$3,570	$6,510	$1,080	$4,160	$6,020	B	178.75	45.25	51.50	2,660
CDE-0240MS*	(2) 4PES-15	128.1	-	$57,480	$57,480	$58,700	$2,220	$3,500	$3,570	$6,510	$1,080	$4,160	$6,020	B	178.75	45.25	51.50	2,725
CDE-0300MS	(2) 4NES-20	150.0	-	$61,080	$61,080	$62,360	$2,220	$3,500	$3,570	$6,510	$1,720	$4,160	$6,020	B	232.75	45.25	51.50	3,115
CDE-0400MS	(2) 4JE-22	169.2	-	$63,040	$63,040	$63,560	$2,220	$3,500	$3,570	$6,710	$1,720	$4,160	$8,700	B	232.75	45.25	51.50	3,168
CDE-0500MS*	(2) 4HE-25	195.7	-	$73,700	$73,700	$74,450	$2,220	$3,500	$3,570	$6,710	$1,720	$4,410	$8,700	C	232.75	45.25	51.50	3,381
CDE-0600MS*	(2) 4GE-30	231.9	-	$83,120	$83,120	$84,870	$2,220	$3,500	$3,570	$6,710	$1,720	$4,580	$8,700	D	146.00	90.50	51.50	3,776
CDE-0700MS	(2) 6HE-35	298.7	-	$92,830	$92,830	$94,820	$2,220	$3,500	$3,570	$8,390	$3,010	$4,580	$13,340	E	200.00	90.50	51.50	4,319
CDE-0800MS*	(2) 6GE-40	344.7	-	$104,540	$104,540	$106,740	$2,220	$3,500	$4,650	$8,390	$3,010	$4,700	$14,810	E	200.00	90.50	51.50	4,942
CDE-0300LQ*	(2) 4HE-25		60.6	$65,850	$65,850	$67,320	$2,220	$3,500	INCLUDED	$6,710	$1,720	$4,160	$8,700	B	178.75	45.25	51.50	2,719
CDE-0440LQ	(2) 4GE-30	-	71.7	$72,940	$72,940	$74,490	$2,220	$3,500	INCLUDED	$6,710	$1,720	$4,160	$8,700	B	232.75	45.25	51.50	3,167
CDE-0540LQ*	(2) 6HE-35	-	90.9	$81,140	$81,140	$82,850	$2,220	$3,500	INCLUDED	$6,710	$1,720	$4,410	$11,570	C	232.75	45.25	51.50	3,452
CDE-0600LQ	(2) 6GE-40	-	106.9	$88,580	$88,580	$90,450	$2,220	$3,500	INCLUDED	$6,710	$1,720	$4,410	$13,220	C	146.00	90.50	51.50	3,688
CDE-0300LS*	(2) 4HE-25		65.9	$62,460	$62,460	$63,910	$2,220	$3,500	INCLUDED	$6,710	$1,720	$4,160	$8,700	B	178.75	45.25	51.50	2,719
CDE-0440LS	(2) 4GE-30	-	77.9	$69,560	$69,560	$71,010	$2,220	$3,500	INCLUDED	$6,710	$1,720	$4,160	$8,700	B	232.75	45.25	51.50	3,179
CDE-0540LS*	(2) 6HE-35	-	98.8	$77,770	$77,770	$79,390	$2,220	$3,500	INCLUDED	$6,710	$1,720	$4,410	$11,570	C	232.75	45.25	51.50	3,477
CDE-0600LS	(2) 6GE-40	-	116.2	$85,200	$85,200	$87,010	$2,220	$3,500	INCLUDED	$6,710	$1,720	$4,410	$13,220	C	146.00	90.50	51.50	3,765

OVERSIZED CONDENSER	COMPRESSOR MODEL	95° F AMBIENT CAPACITY (MBH)		BASE UNIT LIST PRICE			SUCTION FILTER		OPTIONS				4 YEAR EXTENDED COMPRESSOR WARRANTY	STD RECEIVER SIZE	DIMENSIONS (IN)			SHIP WGT (LB)
MODEL	BITZER ECOLINE	@ +25° F Evap	@ -20° F Evap	230V (K)	460V (M)	575V (P)	SEALED	REPLACEABLE CORE	SUCTION ACCUMULATOR	OIL SEPARATOR	PRESSURE FAN CYCLING	HEATED AND INSULATED RECEIVER			L	W	H	
CDE-0101MS*	(2) 4FES-5	46.5	-	$31,480	$31,480	$32,140	$2,220	$3,500	$3,570	$6,510	N/A	$4,160	$4,430	A	124.75	45.25	51.50	1,812
CDE-0151MS	(2) 4EES-6	69.3	-	$39,750	$39,750	$40,610	$2,220	$3,500	$3,570	$6,510	$1,080	$4,160	$4,430	A	178.75	45.25	51.50	2,371
CDE-0161MS	(2) 4DES-7	71.0	-	$42,870	$42,870	$43,800	$2,220	$3,500	$3,570	$6,510	$1,080	$4,160	$4,430	A	178.75	45.25	51.50	2,440
CDE-0181MS*	(2) 4CES-9	92.9	-	$48,980	$48,980	$50,010	$2,220	$3,500	$3,570	$6,510	$1,080	$4,160	$5,630	B	178.75	45.25	51.50	2,729
CDE-0201MS	(2) 4TES-12	112.2	-	$55,680	$55,680	$56,870	$2,220	$3,500	$3,570	$6,510	$1,720	$4,160	$6,020	B	232.75	45.25	51.50	3,077
CDE-0241MS	(2) 4PES-15	131.8	-	$60,120	$60,120	$61,400	$2,220	$3,500	$3,570	$6,510	$1,720	$4,160	$6,020	B	232.75	45.25	51.50	3,079
CDE-0301MS*	(2) 4NES-20	152.7	-	$64,700	$64,700	$66,080	$2,220	$3,500	$3,570	$6,510	$1,720	$4,410	$6,020	C	232.75	45.25	51.50	3,277
CDE-0401MS	(2) 4JE-22	177.2	-	$79,440	$79,440	$80,290	$2,220	$3,500	$3,570	$6,710	$1,720	$4,410	$8,700	C	146.00	90.50	51.50	3,515
CDE-0501MS	(2) 4HE-25	210.1	-	$85,100	$85,100	$86,900	$2,220	$3,500	$3,570	$6,710	$3,010	$4,580	$8,700	D	200.00	90.50	51.50	4,329
CDE-0601MS	(2) 4GE-30	238.4	-	$89,480	$89,480	$91,380	$2,220	$3,500	$3,570	$6,710	$3,010	$4,700	$8,700	E	200.00	90.50	51.50	4,474
CDE-0701MS	(2) 6HE-35	312.0	-	$116,100	$116,100	$118,500	$2,220	$3,500	$3,570	$8,390	$4,290	$4,700	$13,340	E	254.00	90.50	51.50	5,329
CDE-0801MS	(2) 6GE-40	360.0	-	$118,930	$118,930	$121,400	$2,220	$3,500	$4,650	$8,390	$4,290	$4,870	$14,810	F	254.00	90.50	51.50	5,895
CDE-0301LQ	(2) 4HE-25		64.7	$68,150	$68,150	$69,690	$2,220	$3,500	INCLUDED	$6,710	$1,720	$4,160	$8,700	B	232.75	45.25	51.50	3,212
CDE-0441LQ*	(2) 4GE-30	-	74.2	$76,550	$76,550	$78,160	$2,220	$3,500	INCLUDED	$6,710	$1,720	$4,410	$8,700	C	232.75	45.25	51.50	3,261
CDE-0541LQ*	(2) 6HE-35	-	94.2	$86,170	$86,170	$87,980	$2,220	$3,500	INCLUDED	$6,710	$1,720	$4,410	$11,570	C	146.00	90.50	51.50	3,831
CDE-0601LQ	(2) 6GE-40	-	111.1	$99,080	$99,080	$101,180	$2,220	$3,500	INCLUDED	$6,710	$3,010	$4,410	$13,220	D	200.00	90.50	51.50	4,452
CDE-0301LS	(2) 4HE-25		70.3	$64,760	$64,760	$66,210	$2,220	$3,500	INCLUDED	$6,710	$1,720	$4,330	$8,700	B	232.75	45.25	51.50	3,212
CDE-0441LS*	(2) 4GE-30	-	80.7	$74,070	$74,070	$75,640	$2,220	$3,500	INCLUDED	$6,710	$1,720	$4,410	$8,700	C	232.75	45.25	51.50	3,261
CDE-0541LS*	(2) 6HE-35	-	102.4	$82,780	$82,780	$84,530	$2,220	$3,500	INCLUDED	$6,710	$1,720	$4,410	$11,570	C	146.00	90.50	51.50	3,831
CDE-0601LS	(2) 6GE-40	-	120.8	$95,680	$95,680	$97,720	$2,220	$3,500	INCLUDED	$6,710	$3,010	$4,410	$13,220	D	200.00	90.50	51.50	4,452

OVERSIZED CONDENSER	COMPRESSOR MODEL	95° F AMBIENT CAPACITY (MBH)		BASE UNIT LIST PRICE			SUCTION FILTER		OPTIONS				4 YEAR EXTENDED COMPRESSOR WARRANTY	STD RECEIVER SIZE	DIMENSIONS (IN)			SHIP WGT (LB)
MODEL	BITZER ECOLINE	@ +25° F Evap	@ -20° F Evap	230V (K)	460V (M)	575V (P)	SEALED	REPLACEABLE CORE	SUCTION ACCUMULATOR	OIL SEPARATOR	PRESSURE FAN CYCLING	HEATED AND INSULATED RECEIVER			L	W	H	
CDE-0162MS	(2) 4DES-7	72.4	-	$43,890	$43,890	$44,780	$2,220	$3,500	$3,570	$6,510	$1,080	$4,160	$4,430	A	178.75	45.25	51.50	2,495
CDE-0202MS	(2) 4TES-12	109.0	-	$53,480	$53,480	$54,560	$2,220	$3,500	$3,570	$6,510	$1,080	$4,160	$6,020	B	178.75	45.25	51.50	2,719
CDE-0402MS	(2) 4JE-22	172.6	-	$65,650	$65,650	$66,160	$2,220	$3,500	$3,570	$6,710	$1,720	$4,160	$8,700	C	232.75	45.25	51.50	3,256
CDE-0702MS	(2) 6HE-35	304.7	-	$98,060	$98,060	$100,040	$2,220	$3,500	$3,570	$8,390	$3,010	$4,580	$13,340	E	200.00	90.50	51.50	4,494
CDE-0602LQ	(2) 6GE-40	-	109.0	$93,090	$93,090	$94,960	$2,220	$3,500	INCLUDED	$6,710	$1,720	$4,410	$13,220	C	146.00	90.50	51.50	3,895
CDE-0602LS	(2) 6GE-40	-	118.5	$89,710	$89,710	$91,520	$2,220	$3,500	INCLUDED	$6,710	$1,720	$4,410	$13,220	C	146.00	90.50	51.50	3,895

MS - Medium Temperature, R-404A Models Would Be Selected for R-407A (MQ), R-448A (MT), R-449A (MR), R-407F (MF), or R-507A (MP).
LQ - Low Temperature, R-407A Models Would Be Selected for Applications with R-448A (LT), R-449A (LR), or R-407F (LF) and Include Liquid Injection for Discharge Temperature Control. L
S - Low Temperature, R-404A Models Would Be Selected for Applications with R-507A (LP), and Would NOT Include Liquid Injection for Discharge Temperature Control.
Model Numbers with "2" Before the L or M Temperature Range Designation or an "*" at the end have a condenser that meets California Title 24 efficiency requirements.

Prices, product availability, and specifications are subject to change without notice.

LARGE AIR-COOLED CONDENSING UNIT PRODUCT DESCRIPTION

Version: August 2025

CPD - PARALLEL COMPRESSOR MODELS WITH COPELAND DISCUS COMPRESSORS

ONE REFRIGERATION CIRCUIT WITH TWO PARALLEL PIPED COMPRESSORS and ONE ELECTRICAL CIRCUIT

STANDARD CONDENSER	COMPRESSOR MODEL	95° F AMBIENT CAPACITY (MBH)		BASE UNIT LIST PRICE			SUCTION FILTER		OPTIONS		4 YEAR EXTENDED COMPRESSOR WARRANTY	STD RECEIVER SIZE	DIMENSIONS (IN)			SHIP WGT (LB)
MODEL	COPELAND DISCUS	@ +25° F Evap	@ -20° F Evap	230V (K)	460V (M)	575V (P)	SEALED	REPLACEABLE CORE	PRESSURE FAN CYCLING	HEATED AND INSULATED RECEIVER			L	W	H	
CPD-0100MS	(2) 2DC3R53KE	88.1	-	$59,070	$59,070	$60,240	$1,100	$1,670	$1,720	$2,090	$5,010	B	124.75	45.25	51.50	1,793
CPD-0150MS*	(2) 2DL3R78KE	129.9	-	$60,820	$60,820	$62,510	$1,100	$1,670	$1,720	$2,090	$5,010	B	124.75	45.25	51.50	1,884
CPD-0160MS	(2) 2DA3R89KE	150.6	-	$62,540	$62,540	$64,000	$1,100	$1,670	$1,720	$2,220	$5,010	C	178.75	45.25	51.50	2,423
CPD-0180MS	(2) 3DA3R10ME	179.1	-	$63,250	$63,250	$64,610	$1,100	$1,670	$1,720	$2,220	$6,240	C	178.75	45.25	51.50	2,578
CPD-0200MS	(2) 3DB3R12ME	215.0	-	$67,500	$67,500	$68,960	$1,100	$1,670	$1,720	$2,280	$6,240	D	178.75	45.25	51.50	2,705
CPD-0240MS*	(2) 3DF3R15ME	249.7	-	$68,020	$68,020	-	$1,100	$1,670	$1,720	$2,280	$6,240	D	178.75	45.25	51.50	2,770
CPD-0300MS	(2) 3DS3R17ME	287.6	-	$72,580	$72,580	$75,380	$1,100	$1,670	$1,720	$2,350	$6,240	E	232.75	45.25	51.50	3,160
CPD-0400MS	(2) 4DBNR20ME	344.3	-	$76,150	$76,150	$77,320	$1,100	$1,670	$1,720	$2,350	$10,370	E	232.75	45.25	51.50	3,213
CPD-0500MS*	(2) 4DHNR22ME	376.3	-	$81,380	$81,380	$83,060	$1,100	$1,670	$1,720	$2,350	$11,570	E	232.75	45.25	51.50	3,410
CPD-0600MS*	(2) 4DJNR28ME	459.6	-	$90,790	$90,790	$92,660	$1,100	$1,670	$1,080	$2,450	$13,220	F	146.00	90.50	51.50	3,833
CPD-0700MS	(2) 6DHNR35ME	561.0	-	$100,490	$100,490	$102,610	$1,100	$1,670	$1,720	$2,450	$13,340	F	200.00	90.50	51.50	4,397
CPD-0800MS*	(2) 6DJNR40ME	681.3	-	$112,190	$112,190	$114,560	$1,100	$1,670	$1,720	$3,190	$14,810	H	200.00	90.50	51.50	5,058
CPD-0300LQ*	(2) 4DKNF63KE		129.4	$69,480	$69,480	$80,090	$1,100	$1,670	$1,720	$2,150	$8,530	D	178.75	45.25	51.50	2,737
CPD-0440LQ	(2) 4DJNF76KE	-	156.3	$80,600	$80,600	$82,270	$1,100	$1,670	$1,720	$2,150	$9,040	D	232.75	45.25	51.50	3,164
CPD-0540LQ*	(2) 6DHNF93KE	-	188.8	$88,800	$88,800	$90,650	$1,100	$1,670	$1,720	$2,350	$11,570	E	232.75	45.25	51.50	3,512
CPD-0600LQ	(2) 6DJNF11ME	-	228.0	$95,840	$95,840	$97,840	$1,530	$2,170	$1,080	$2,350	$13,220	E	146.00	90.50	51.50	3,769
CPD-0300LS*	(2) 4DKNF63KE		142.2	$65,680	$65,680	$76,220	$1,530	$1,670	$1,720	$2,150	$8,530	D	178.75	45.25	51.50	2,737
CPD-0440LS	(2) 4DJNF76KE	-	171.8	$76,800	$76,800	$78,390	$1,530	$1,670	$1,720	$2,150	$9,040	D	232.75	45.25	51.50	3,167
CPD-0540LS*	(2) 6DHNF93KE	-	212.1	$85,010	$85,010	$86,780	$1,530	$1,670	$1,720	$2,350	$11,570	E	232.75	45.25	51.50	3,453
CPD-0600LS	(2) 6DJNF11ME	-	237.5	$92,450	$92,450	$94,380	$1,530	$2,170	$1,080	$2,350	$13,220	E	146.00	90.50	51.50	3,772

OVERSIZED CONDENSER	COMPRESSOR MODEL	95° F AMBIENT CAPACITY (MBH)		BASE UNIT LIST PRICE			SUCTION FILTER		OPTIONS		4 YEAR EXTENDED COMPRESSOR WARRANTY	STD RECEIVER SIZE	DIMENSIONS (IN)			SHIP WGT (LB)
MODEL	COPELAND DISCUS	@ +25° F Evap	@ -20° F Evap	230V (K)	460V (M)	575V (P)	SEALED	REPLACEABLE CORE	PRESSURE FAN CYCLING	HEATED AND INSULATED RECEIVER			L	W	H	
CPD-0101MS*	(2) 2DC3R53KE	91.6	-	$59,900	$59,900	$61,070	$1,100	$1,670	$1,720	$2,090	$5,010	B	124.75	45.25	51.50	1,857
CPD-0151MS	(2) 2DL3R78KE	134.2	-	$62,280	$62,280	$63,970	$1,100	$1,670	$1,720	$2,220	$5,010	C	178.75	45.25	51.50	2,416
CPD-0161MS	(2) 2DA3R89KE	153.4	-	$63,540	$63,540	$65,000	$1,100	$1,670	$1,720	$2,220	$5,010	C	178.75	45.25	51.50	2,485
CPD-0181MS*	(2) 3DA3R10ME	184.8	-	$64,870	$64,870	$66,220	$1,100	$1,670	$1,720	$2,280	$6,240	C	178.75	45.25	51.50	2,774
CPD-0201MS	(2) 3DB3R12ME	221.5	-	$70,110	$70,110	$71,570	$1,100	$1,670	$1,720	$2,280	$6,240	D	232.75	45.25	51.50	3,122
CPD-0241MS	(2) 3DF3R15ME	256.0	-	$71,390	$71,390	-	$1,100	$1,670	$1,720	$2,280	$6,240	E	232.75	45.25	51.50	3,124
CPD-0301MS*	(2) 3DS3R17ME	290.1	-	$73,430	$73,430	$76,230	$1,100	$1,670	$1,720	$2,350	$6,240	E	232.75	45.25	51.50	3,322
CPD-0401MS	(2) 4DBNR20ME	360.6	-	$81,750	$81,750	$82,930	$1,100	$1,670	$1,720	$2,450	$10,370	F	146.00	90.50	51.50	3,560
CPD-0501MS	(2) 4DHNR22ME	407.5	-	$83,820	$83,820	$85,610	$1,100	$1,670	$1,720	$2,450	$11,570	F	200.00	90.50	51.50	4,389
CPD-0601MS	(2) 4DJNR28ME	479.4	-	$97,140	$97,140	$99,170	$1,100	$1,670	$1,720	$2,550	$13,220	G	200.00	90.50	51.50	4,448
CPD-0701MS	(2) 6DHNR35ME	609.0	-	$109,200	$109,200	$111,450	$1,530	$2,170	$2,370	$3,190	$13,340	H	254.00	90.50	51.50	5,412
CPD-0801MS	(2) 6DJNR40ME	708.4	-	$126,190	$126,190	$128,800	$1,530	$2,170	$2,370	$3,190	$14,810	H	254.00	90.50	51.50	5,816
CPD-0301LQ	(2) 4DKNF63KE	-	135.5	$71,780	$71,780	$82,390	$1,100	$1,670	$1,720	$2,150	$8,530	D	232.75	45.25	51.50	3,320
CPD-0441LQ*	(2) 4DJNF76KE	-	160.7	$84,230	$84,230	$85,960	$1,100	$1,670	$1,720	$2,350	$9,040	E	232.75	45.25	51.50	3,320
CPD-0541LQ*	(2) 6DHNF93KE	-	193.9	$93,840	$93,840	$95,780	$1,100	$1,670	$1,080	$2,450	$11,570	L	146.00	90.50	51.50	3,823
CPD-0601LQ	(2) 6DJNF11ME	-	234.5	$106,320	$106,320	$108,570	$1,530	$2,170	$1,720	$2,450	$13,220	F	200.00	90.50	51.50	4,465
CPD-0301LS	(2) 4DKNF63KE	-	150.6	$67,980	$67,980	$78,520	$1,530	$2,170	$1,080	$2,150	$8,530	D	232.75	45.25	51.50	3,320
CPD-0441LS*	(2) 4DJNF76KE	-	176.6	$81,320	$81,320	$83,010	$1,530	$2,170	$1,080	$2,350	$9,040	E	232.75	45.25	51.50	3,320
CPD-0541LS*	(2) 6DHNF93KE	-	217.9	$90,030	$90,030	$91,920	$1,530	$2,170	$1,080	$2,450	$11,570	F	146.00	90.50	51.50	3,872
CPD-0601LS	(2) 6DJNF11ME	-	246.8	$102,940	$102,940	$105,120	$1,530	$2,170	$1,720	$2,450	$13,220	F	200.00	90.50	51.50	4,566

OVERSIZED CONDENSER	COMPRESSOR MODEL	95° F AMBIENT CAPACITY (MBH)		BASE UNIT LIST PRICE			SUCTION FILTER		OPTIONS		4 YEAR EXTENDED COMPRESSOR WARRANTY	STD RECEIVER SIZE	DIMENSIONS (IN)			SHIP WGT (LB)
MODEL	COPELAND DISCUS	@ +25° F Evap	@ -20° F Evap	230V (K)	460V (M)	575V (P)	SEALED	REPLACEABLE CORE	PRESSURE FAN CYCLING	HEATED AND INSULATED RECEIVER			L	W	H	
CPD-0162MS	(2) 2DA3R89KE	156.5	-	$64,160	$64,160	$65,610	$1,100	$1,670	$1,720	$2,280	$5,010	D	178.75	45.25	51.50	2,544
CPD-0202MS	(2) 3DB3R12ME	219.3	-	$66,740	$66,740	$68,200	$1,100	$1,670	$1,720	$2,280	$6,240	D	178.75	45.25	51.50	2,764
CPD-0402MS	(2) 4DBNR20ME	351.2	-	$79,490	$79,490	$80,660	$1,100	$1,670	$1,720	$2,350	$10,370	E	232.75	45.25	51.50	3,301
CPD-0702MS	(2) 6DHNR35ME	572.2	-	$105,710	$105,710	$107,820	$1,100	$1,670	$1,720	$2,450	$13,340	H	200.00	90.50	51.50	4,572
CPD-0602LQ	(2) 6DJNF11ME	-	232.6	$100,360	$100,360	$102,350	$1,530	$2,170	$1,080	$2,350	$13,220	F	146.00	90.50	51.50	3,899
CPD-0602LS	(2) 6DJNF11ME	-	242.3	$96,960	$96,960	$98,890	$1,530	$2,170	$1,080	$2,350	$13,220	F	146.00	90.50	51.50	3,902

ALL PARALLEL UNITS INCLUDE SUCTION ACCUMULATOR AND OIL SEPARATOR.

MS - Medium Temperature, R-404A Models Would Be Selected for R-407A (MQ), R-448A (MT), R-449A (MR), R-407F (MF), or R-507A (MP).

LQ - Low Temperature, R-407A Models Would Be Selected for Applications with R-448A (LT), R-449A (LR), or R-407F (LF) and Include Liquid Injection for Discharge Temperature Control.

LS - Low Temperature, R-404A Models Would Be Selected for Applications with R-507A (LP), and Would NOT Include Liquid Injection for Discharge Temperature Control.

Model Numbers with "2" Before the L or M Temperature Range Designation or an "*" at the end have a condenser that meets California Title 24 efficiency requirements.

Prices, product availability, and specifications are subject to change without notice.

LARGE AIR-COOLED CONDENSING UNIT PRODUCT DESCRIPTION

Version: August 2025

CPB - PARALLEL COMPRESSOR MODELS WITH BITZER ECOLINE COMPRESSORS *(Motor 2)*

ONE REFRIGERATION CIRCUIT WITH TWO PARALLEL PIPED COMPRESSORS and ONE ELECTRICAL CIRCUIT

STANDARD CONDENSER	COMPRESSOR MODEL	95° F AMBIENT CAPACITY (MBH)		BASE UNIT LIST PRICE			SUCTION FILTER		OPTIONS		4 YEAR EXTENDED COMPRESSOR WARRANTY	STD RECEIVER SIZE	DIMENSIONS (IN)			SHIP WGT (LB)
MODEL	BITZER ECOLINE	@ +25° F Evap	@ -20° F Evap	230V (K)	460V (M)	575V (P)	SEALED	REPLACEABLE CORE	PRESSURE FAN CYCLING	HEATED AND INSULATED RECEIVER			L	W	H	
CPB-0100MS	(2) 4FES-3	87.7	-	$57,170	$57,170	$58,850	$1,100	$1,670	$1,720	$2,090	$4,430	B	124.75	45.25	51.50	1,793
CPB-0150MS*	(2) 4EES-4	132.0	-	$58,340	$58,340	$60,020	$1,100	$1,670	$1,720	$2,090	$4,430	B	124.75	45.25	51.50	1,884
CPB-0160MS	(2) 4DES-5	138.5	-	$61,770	$61,770	$63,450	$1,100	$1,670	$1,720	$2,220	$4,430	C	178.75	45.25	51.50	2,423
CPB-0180MS	(2) 4CES-6	177.1	-	$64,810	$64,810	$66,490	$1,100	$1,670	$1,720	$2,220	$4,430	C	178.75	45.25	51.50	2,578
CPB-0200MS	(2) 4TES-9	213.8	-	$68,040	$68,040	$69,720	$1,100	$1,670	$1,720	$2,280	$6,020	D	178.75	45.25	51.50	2,705
CPB-0240MS*	(2) 4PES-12	256.2	-	$67,840	$67,840	$69,520	$1,100	$1,670	$1,720	$2,280	$6,020	D	178.75	45.25	51.50	2,770
CPB-0300MS	(2) 4NES-14	300.1	-	$73,780	$73,780	$75,460	$1,100	$1,670	$1,720	$2,350	$6,020	E	232.75	45.25	51.50	3,160
CPB-0400MS	(2) 4JE-15	338.4	-	$76,150	$76,150	$77,320	$1,100	$1,670	$1,720	$2,350	$8,700	E	232.75	45.25	51.50	3,213
CPB-0500MS	(2) 4HE-18	391.4	-	$81,380	$81,380	$83,060	$1,100	$1,670	$1,720	$2,350	$8,700	E	232.75	45.25	51.50	3,410
CPB-0600MS	(2) 4GE-23	463.8	-	$90,790	$90,790	$92,660	$1,100	$1,670	$1,080	$2,450	$8,700	F	146.00	90.50	51.50	3,833
CPB-0700MS	(2) 6HE-28	597.4	-	$100,490	$100,490	$102,610	$1,100	$1,670	$1,720	$2,450	$13,340	F	200.00	90.50	51.50	4,397
CPB-0800MS	(2) 6GE-34	689.4	-	$112,190	$112,190	$114,560	$1,100	$1,670	$1,720	$3,190	$14,810	H	200.00	90.50	51.50	5,058
CPB-0300LQ*	(2) 4HE-18	-	121.3	$73,770	$73,770	$75,440	$1,100	$1,670	$1,720	$2,150	$8,700	D	178.75	45.25	51.50	2,737
CPB-0440LQ	(2) 4GE-23	-	143.3	$80,600	$80,600	$82,270	$1,100	$1,670	$1,720	$2,150	$8,700	D	232.75	45.25	51.50	3,164
CPB-0540LQ	(2) 6HE-28	-	181.8	$88,800	$88,800	$90,650	$1,100	$1,670	$1,720	$2,350	$11,570	E	232.75	45.25	51.50	3,512
CPB-0600LQ	(2) 6GE-34	-	213.9	$95,840	$95,840	$97,840	$1,530	$2,170	$1,080	$2,350	$13,220	E	146.00	90.50	51.50	3,769
CPB-0300LS*	(2) 4HE-18	-	131.8	$69,970	$69,970	$71,570	$1,530	$2,170	$1,720	$2,150	$8,700	D	178.75	45.25	51.50	2,737
CPB-0440LS	(2) 4GE-23	-	155.8	$76,800	$76,800	$78,390	$1,530	$2,170	$1,720	$2,150	$8,700	D	232.75	45.25	51.50	3,167
CPB-0540LS	(2) 6HE-28	-	197.6	$85,010	$85,010	$86,780	$1,530	$2,170	$1,720	$2,350	$11,570	E	232.75	45.25	51.50	3,453
CPB-0600LS	(2) 6GE-34	-	232.5	$92,450	$92,450	$94,380	$1,530	$2,170	$1,080	$2,350	$13,220	E	146.00	90.50	51.50	3,772

OVERSIZED CONDENSER	COMPRESSOR MODEL	95° F AMBIENT CAPACITY (MBH)		BASE UNIT LIST PRICE			SUCTION FILTER		OPTIONS		4 YEAR EXTENDED COMPRESSOR WARRANTY	STD RECEIVER SIZE	DIMENSIONS (IN)			SHIP WGT (LB)
MODEL	BITZER ECOLINE	@ +25° F Evap	@ -20° F Evap	230V (K)	460V (M)	575V (P)	SEALED	REPLACEABLE CORE	PRESSURE FAN CYCLING	HEATED AND INSULATED RECEIVER			L	W	H	
CPB-0101MS*	(2) 4FES-3	93.0	-	$58,000	$58,000	$59,680	$1,100	$1,670	$1,720	$2,090	$4,430	B	124.75	45.25	51.50	1,857
CPB-0151MS	(2) 4EES-4	138.5	-	$59,800	$59,800	$61,480	$1,100	$1,670	$1,720	$2,220	$4,430	C	178.75	45.25	51.50	2,416
CPB-0161MS	(2) 4DES-5	142.0	-	$62,770	$62,770	$64,450	$1,100	$1,670	$1,720	$2,220	$4,430	C	178.75	45.25	51.50	2,485
CPB-0181MS*	(2) 4CES-6	185.8	-	$66,420	$66,420	$68,100	$1,100	$1,670	$1,720	$2,280	$4,430	C	178.75	45.25	51.50	2,774
CPB-0201MS	(2) 4TES-9	224.4	-	$70,640	$70,640	$72,320	$1,100	$1,670	$1,720	$2,280	$6,020	D	232.75	45.25	51.50	3,122
CPB-0241MS	(2) 4PES-12	263.6	-	$71,210	$71,210	$72,890	$1,100	$1,670	$1,720	$2,350	$6,020	E	232.75	45.25	51.50	3,124
CPB-0301MS*	(2) 4NES-14	305.4	-	$74,630	$74,630	$76,310	$1,100	$1,670	$1,720	$2,350	$6,020	E	232.75	45.25	51.50	3,322
CPB-0401MS	(2) 4JE-15	354.4	-	$81,860	$81,860	$83,540	$1,100	$1,670	$1,720	$2,450	$8,700	F	146.00	90.50	51.50	3,560
CPB-0501MS	(2) 4HE-18	420.2	-	$83,820	$83,820	$85,610	$1,100	$1,670	$1,720	$2,450	$8,700	F	200.00	90.50	51.50	4,389
CPB-0601MS	(2) 4GE-23	476.8	-	$97,140	$97,140	$99,170	$1,100	$1,670	$1,720	$2,550	$8,700	G	200.00	90.50	51.50	4,448
CPB-0701MS	(2) 6HE-28	624.0	-	$109,200	$109,200	$111,450	$1,530	$2,170	$2,370	$3,190	$13,340	H	254.00	90.50	51.50	5,412
CPB-0801MS	(2) 6GE-34	720.0	-	$126,190	$126,190	$128,800	$1,530	$2,170	$2,370	$3,190	$14,810	H	254.00	90.50	51.50	5,816
CPB-0301LQ	(2) 4HE-18	-	129.4	$76,070	$76,070	$77,740	$1,100	$1,670	$1,720	$2,150	$8,700	D	232.75	45.25	51.50	3,320
CPB-0441LQ	(2) 4GE-23	-	148.4	$84,230	$84,230	$85,960	$1,100	$1,670	$1,720	$2,350	$8,700	E	232.75	45.25	51.50	3,320
CPB-0541LQ	(2) 6HE-28	-	188.4	$93,840	$93,840	$95,780	$1,100	$1,670	$1,080	$2,450	$11,570	L	146.00	90.50	51.50	3,823
CPB-0601LQ	(2) 6GE-34	-	222.3	$106,320	$106,320	$108,570	$1,530	$2,170	$1,720	$2,450	$13,220	F	200.00	90.50	51.50	4,465
CPB-0301LS	(2) 4HE-18	-	140.7	$72,270	$72,270	$73,870	$1,100	$2,260	$1,720	$2,150	$8,700	D	232.75	45.25	51.50	3,320
CPB-0441LS	(2) 4GE-23	-	197.6	$81,320	$81,320	$83,010	$1,530	$2,170	$1,080	$2,350	$8,700	E	232.75	45.25	51.50	3,320
CPB-0541LS	(2) 6HE-28	-	204.8	$90,030	$90,030	$91,920	$1,530	$2,170	$1,080	$2,450	$11,570	F	146.00	90.50	51.50	3,823
CPB-0601LS	(2) 6GE-34	-	241.6	$102,940	$102,940	$105,120	$1,530	$2,170	$1,720	$2,450	$13,220	F	200.00	90.50	51.50	4,465

OVERSIZED CONDENSER	COMPRESSOR MODEL	95° F AMBIENT CAPACITY (MBH)		BASE UNIT LIST PRICE			SUCTION FILTER		OPTIONS		4 YEAR EXTENDED COMPRESSOR WARRANTY	STD RECEIVER SIZE	DIMENSIONS (IN)			SHIP WGT (LB)
MODEL	BITZER ECOLINE	@ +25° F Evap	@ -20° F Evap	230V (K)	460V (M)	575V (P)	SEALED	REPLACEABLE CORE	PRESSURE FAN CYCLING	HEATED AND INSULATED RECEIVER			L	W	H	
CPB-0162MS	(2) 4DES-5	144.8	-	$63,390	$63,390	$65,070	$1,100	$1,670	$1,720	$2,280	$4,430	D	178.75	45.25	51.50	2,544
CPB-0202MS	(2) 4TES-9	218.1	-	$67,270	$67,270	$68,950	$1,100	$1,670	$1,720	$2,280	$6,020	D	178.75	45.25	51.50	2,764
CPB-0402MS	(2) 4JE-15	345.2	-	$79,590	$79,590	$81,270	$1,100	$1,670	$1,720	$2,350	$8,700	E	232.75	45.25	51.50	3,301
CPB-0702MS	(2) 6HE-28	609.3	-	$105,710	$105,710	$107,820	$1,100	$1,670	$1,720	$2,450	$13,340	H	200.00	90.50	51.50	4,572
CPB-0602LQ	(2) 6GE-34	-	218.2	$100,360	$100,360	$102,350	$1,530	$2,170	$1,080	$2,350	$13,220	F	146.00	90.50	51.50	3,899
CPB-0602LS	(2) 6GE-34	-	237.2	$96,960	$96,960	$98,890	$1,530	$2,170	$1,080	$2,350	$13,220	F	146.00	90.50	51.50	3,902

ALL PARALLEL UNITS INCLUDE SUCTION ACCUMULATOR AND OIL SEPARATOR.

MS - Medium Temperature, R-404A Models Would Be Selected for R-407A (MQ), R-448A (MT), R-449A (MR), R-407F (MF), or R-507A (MP).

LQ - Low Temperature, R-407A Models Would Be Selected for Applications with R-448A (LT), R-449A (LR), or R-407F (LF) and Include Liquid Injection for Discharge Temperature Control.

LS - Low Temperature, R-404A Models Would Be Selected for Applications with R-507A (LP), and Would NOT Include Liquid Injection for Discharge Temperature Control.

Model Numbers with "2" Before the L or M Temperature Range Designation or an "*" at the end have a condenser that meets California Title 24 efficiency requirements.

Prices, product availability, and specifications are subject to change without notice.

LARGE AIR-COOLED CONDENSING UNIT PRODUCT DESCRIPTION

Version: August 2025

CPE - PARALLEL COMPRESSOR MODELS WITH BITZER ECOLINE COMPRESSORS *(Motor 1)*

ONE REFRIGERATION CIRCUIT WITH TWO PARALLEL PIPED COMPRESSORS and ONE ELECTRICAL CIRCUIT

STANDARD CONDENSER	COMPRESSOR MODEL	95° F AMBIENT CAPACITY (MBH)		BASE UNIT LIST PRICE			SUCTION FILTER		OPTIONS		4 YEAR EXTENDED COMPRESSOR WARRANTY	STD RECEIVER SIZE	DIMENSIONS (IN)			SHIP WGT (LB)
MODEL	BITZER ECOLINE	@ +25° F Evap	@ -20° F Evap	230V (K)	460V (M)	575V (P)	SEALED	REPLACEABLE CORE	PRESSURE FAN CYCLING	HEATED AND INSULATED RECEIVER			L	W	H	
CPE-0100MS	(2) 4FES-5	87.7	-	$57,370	$57,370	$59,050	$1,100	$1,670	$1,720	$2,090	$4,430	B	124.75	45.25	51.50	1,793
CPE-0150MS*	(2) 4EES-6	132.0	-	$58,550	$58,550	$60,230	$1,100	$1,670	$1,720	$2,090	$4,430	B	124.75	45.25	51.50	1,884
CPE-0160MS	(2) 4DES-7	138.5	-	$62,360	$62,360	$64,040	$1,100	$1,670	$1,720	$2,220	$4,430	C	178.75	45.25	51.50	2,423
CPE-0180MS	(2) 4CES-9	177.1	-	$65,040	$65,040	$66,720	$1,100	$1,670	$1,720	$2,220	$5,630	C	178.75	45.25	51.50	2,578
CPE-0200MS	(2) 4TES-12	213.8	-	$68,740	$68,740	$70,420	$1,100	$1,670	$1,720	$2,280	$6,020	D	178.75	45.25	51.50	2,705
CPE-0240MS*	(2) 4PES-15	256.2	-	$68,550	$68,550	$70,230	$1,100	$1,670	$1,720	$2,280	$6,020	D	178.75	45.25	51.50	2,770
CPE-0300MS	(2) 4NES-20	300.1	-	$74,570	$74,570	$76,250	$1,100	$1,670	$1,720	$2,350	$6,020	E	232.75	45.25	51.50	3,160
CPE-0400MS	(2) 4JE-22	338.4	-	$77,120	$77,120	$78,800	$1,100	$1,670	$1,720	$2,350	$8,700	E	232.75	45.25	51.50	3,213
CPE-0500MS	(2) 4HE-25	391.4	-	$81,650	$81,650	$83,330	$1,100	$1,670	$1,720	$2,350	$8,700	E	232.75	45.25	51.50	3,410
CPE-0600MS	(2) 4GE-30	463.8	-	$91,070	$91,070	$92,940	$1,100	$1,670	$1,080	$2,450	$8,700	F	146.00	90.50	51.50	3,833
CPE-0700MS	(2) 6HE-35	597.4	-	$100,760	$100,760	$102,880	$1,100	$1,670	$1,720	$2,450	$13,340	F	200.00	90.50	51.50	4,397
CPE-0800MS	(2) 6GE-40	689.4	-	$112,470	$112,470	$114,830	$1,100	$1,670	$1,720	$3,190	$14,810	H	200.00	90.50	51.50	5,058
CPE-0300LQ*	(2) 4HE-25	-	121.3	$74,270	$74,270	$75,940	$1,100	$1,670	$1,720	$2,150	$8,700	D	178.75	45.25	51.50	2,737
CPE-0440LQ	(2) 4GE-30	-	143.3	$80,870	$80,870	$82,540	$1,100	$1,670	$1,720	$2,150	$8,700	D	232.75	45.25	51.50	3,164
CPE-0540LQ	(2) 6HE-35	-	181.8	$89,070	$89,070	$90,920	$1,100	$1,670	$1,720	$2,350	$11,570	E	232.75	45.25	51.50	3,512
CPE-0600LQ	(2) 6GE-40	-	213.9	$96,120	$96,120	$98,110	$1,530	$2,170	$1,080	$2,350	$13,220	E	146.00	90.50	51.50	3,769
CPE-0300LS*	(2) 4HE-25	-	131.8	$70,470	$70,470	$72,060	$1,530	$2,170	$1,720	$2,150	$8,700	D	178.75	45.25	51.50	2,737
CPE-0440LS	(2) 4GE-30	-	155.8	$77,070	$77,070	$78,670	$1,530	$2,170	$1,720	$2,150	$8,700	D	232.75	45.25	51.50	3,167
CPE-0540LS	(2) 6HE-35	-	197.6	$85,280	$85,280	$87,060	$1,530	$2,170	$1,720	$2,350	$11,570	E	232.75	45.25	51.50	3,453
CPE-0600LS	(2) 6GE-40	-	232.5	$92,730	$92,730	$94,660	$1,530	$2,170	$1,080	$2,350	$13,220	E	146.00	90.50	51.50	3,772

OVERSIZED CONDENSER	COMPRESSOR MODEL	95° F AMBIENT CAPACITY (MBH)		BASE UNIT LIST PRICE			SUCTION FILTER		OPTIONS		4 YEAR EXTENDED COMPRESSOR WARRANTY	STD RECEIVER SIZE	DIMENSIONS (IN)			SHIP WGT (LB)
MODEL	BITZER ECOLINE	@ +25° F Evap	@ -20° F Evap	230V (K)	460V (M)	575V (P)	SEALED	REPLACEABLE CORE	PRESSURE FAN CYCLING	HEATED AND INSULATED RECEIVER			L	W	H	
CPE-0101MS*	(2) 4FES-5	93.0	-	$58,200	$58,200	$59,880	$1,100	$1,670	$1,720	$2,090	$4,430	B	124.75	45.25	51.50	1,857
CPE-0151MS	(2) 4EES-6	138.5	-	$60,010	$60,010	$61,690	$1,100	$1,670	$1,720	$2,220	$4,430	C	178.75	45.25	51.50	2,416
CPE-0161MS	(2) 4DES-7	144.8	-	$63,360	$63,360	$65,040	$1,100	$1,670	$1,720	$2,220	$4,430	C	178.75	45.25	51.50	2,485
CPE-0181MS*	(2) 4CES-9	185.8	-	$66,650	$66,650	$68,330	$1,100	$1,670	$1,720	$2,280	$5,630	C	178.75	45.25	51.50	2,774
CPE-0201MS	(2) 4TES-12	224.4	-	$71,350	$71,350	$73,030	$1,100	$1,670	$1,720	$2,280	$6,020	D	232.75	45.25	51.50	3,122
CPE-0241MS	(2) 4PES-15	263.6	-	$71,930	$71,930	$73,610	$1,100	$1,670	$1,720	$2,350	$6,020	E	232.75	45.25	51.50	3,124
CPE-0301MS*	(2) 4NES-20	305.4	-	$75,420	$75,420	$77,100	$1,100	$1,670	$1,720	$2,350	$6,020	E	232.75	45.25	51.50	3,322
CPE-0401MS	(2) 4JE-22	354.4	-	$82,730	$82,730	$84,410	$1,100	$1,670	$1,720	$2,450	$8,700	F	146.00	90.50	51.50	3,560
CPE-0501MS	(2) 4HE-25	420.2	-	$84,090	$84,090	$85,880	$1,100	$1,670	$1,720	$2,450	$8,700	F	200.00	90.50	51.50	4,389
CPE-0601MS	(2) 4GE-30	476.8	-	$97,410	$97,410	$99,450	$1,100	$1,670	$1,720	$2,550	$8,700	G	200.00	90.50	51.50	4,448
CPE-0701MS	(2) 6HE-35	624.0	-	$109,470	$109,470	$111,720	$1,530	$2,170	$2,370	$3,190	$13,340	H	254.00	90.50	51.50	5,412
CPE-0801MS	(2) 6GE-40	720.0	-	$126,460	$126,460	$129,080	$1,530	$2,170	$2,370	$3,190	$14,810	H	254.00	90.50	51.50	5,816
CPE-0301LQ	(2) 4HE-25	-	129.4	$76,570	$76,570	$78,240	$1,100	$1,670	$1,720	$2,150	$8,700	D	232.75	45.25	51.50	3,320
CPE-0441LQ	(2) 4GE-30	-	148.4	$84,500	$84,500	$86,240	$1,100	$1,670	$1,720	$2,350	$8,700	E	232.75	45.25	51.50	3,320
CPE-0541LQ	(2) 6HE-35	-	188.4	$94,110	$94,110	$96,050	$1,100	$1,670	$1,080	$2,450	$11,570	L	146.00	90.50	51.50	3,823
CPE-0601LQ	(2) 6GE-40	-	222.3	$106,600	$106,600	$108,840	$1,530	$2,170	$1,720	$2,450	$13,220	F	200.00	90.50	51.50	4,465
CPE-0301LS	(2) 4HE-25	-	140.7	$72,770	$72,770	$74,360	$1,100	$2,260	$1,720	$2,150	$8,700	D	232.75	45.25	51.50	3,320
CPE-0441LS	(2) 4GE-30	-	161.3	$81,600	$81,600	$83,290	$1,530	$2,170	$1,080	$2,350	$8,700	E	146.00	90.50	51.50	3,509
CPE-0541LS	(2) 6HE-35	-	204.8	$90,300	$90,300	$92,190	$1,530	$2,170	$1,080	$2,450	$11,570	F	146.00	90.50	51.50	3,872
CPE-0601LS	(2) 6GE-40	-	241.6	$103,220	$103,220	$105,390	$1,530	$2,170	$1,720	$2,450	$13,220	F	200.00	90.50	51.50	4,566

OVERSIZED CONDENSER	COMPRESSOR MODEL	95° F AMBIENT CAPACITY (MBH)		BASE UNIT LIST PRICE			SUCTION FILTER		OPTIONS		4 YEAR EXTENDED COMPRESSOR WARRANTY	STD RECEIVER SIZE	DIMENSIONS (IN)			SHIP WGT (LB)
MODEL	BITZER ECOLINE	@ +25° F Evap	@ -20° F Evap	230V (K)	460V (M)	575V (P)	SEALED	REPLACEABLE CORE	PRESSURE FAN CYCLING	HEATED AND INSULATED RECEIVER			L	W	H	
CPE-0162MS	(2) 4DES-7	144.8	-	$63,980	$63,980	$65,660	$1,100	$1,670	$1,720	$2,280	$4,430	D	178.75	45.25	51.50	2,544
CPE-0202MS	(2) 4TES-12	218.1	-	$67,980	$67,980	$69,660	$1,100	$1,670	$1,720	$2,280	$6,020	D	178.75	45.25	51.50	2,764
CPE-0402MS	(2) 4JE-22	345.2	-	$80,460	$80,460	$82,140	$1,100	$1,670	$1,720	$2,350	$8,700	E	232.75	45.25	51.50	3,301
CPE-0702MS	(2) 6HE-35	609.3	-	$105,990	$105,990	$108,100	$1,100	$1,670	$1,720	$2,450	$13,340	H	200.00	90.50	51.50	4,572
CPE-0602LQ	(2) 6GE-40	-	218.2	$100,630	$100,630	$102,630	$1,530	$2,170	$1,080	$2,350	$13,220	F	146.00	90.50	51.50	3,899
CPE-0602LS	(2) 6GE-40	-	237.2	$97,230	$97,230	$99,160	$1,530	$2,170	$1,080	$2,350	$13,220	F	146.00	90.50	51.50	3,902

ALL PARALLEL UNITS INCLUDE SUCTION ACCUMULATOR AND OIL SEPARATOR.

MS - Medium Temperature, R-404A Models Would Be Selected for R-407A (MQ), R-448A (MT), R-449A (MR), R-407F (MF), or R-507A (MP).

LQ - Low Temperature, R-407A Models Would Be Selected for Applications with R-448A (LT), R-449A (LR), or R-407F (LF) and Include Liquid Injection for Discharge Temperature Control.

LS - Low Temperature, R-404A Models Would Be Selected for Applications with R-507A (LP), and Would NOT Include Liquid Injection for Discharge Temperature Control.

Model Numbers with "2" Before the L or M Temperature Range Designation or an "*" at the end have a condenser that meets California Title 24 efficiency requirements.

Prices, product availability, and specifications are subject to change without notice.

LARGE AIR-COOLED CONDENSING UNIT OPTIONS

Large Condensing Unit Electrical Options: MOUNTED DEFROST KITS	LIST PRICE *
A-1 - Air Defrost Kit (Defrost Kit Includes Defrost Time Clock Only)	$500
A-2 - Air Defrost Kit (Includes Defrost Timer and Fused Fan Contactor)	$860
E-1 - Electric Defrost Kit (For Use with 230/1 Fan and Heaters Only. Includes Electric Defrost Time Clock.)	$500
E-2 - Electric Defrost Kit (Includes Electric Defrost Time Clock and Fused Heater Contactor up to 48 Amp.)	$1,030
E-3 - Defrost Kit (Includes Electric Defrost Time Clock, Fused Heater and Contactor (Up to 48 Amp), and Fused Fan Contactor Up to 12 Amp).	$1,520
E-4 - Defrost Kit (Includes Electric Defrost Time Clock, Fused Heater and Contactors (2 - 48 Amp Max Each), and Fused Fan Contactor Up to 48 Amp).	$2,090
E-5 - Defrost Kit (Includes Electric Defrost Time Clock, Fused Heater and Contactors (3 - 48 Amp Max Each), and Fused Fan Contactor Up to 48 Amp).	$2,650

***NOTE:** For Dual (CD) units, add option per circuit (2X).*

ADDITIONAL OPTIONS	LIST PRICE *
115 Volt Control Circuit	$560
Phase Loss Monitor	$1,170
Anti-Short Cycle Time Delay Relay	$830
Safe Start Time Delay (Bypass Low Pressure Control)	$830
Current Sensing Relay	$830
Oil Reservoir (For Use with Oil Separator)	$2,700
VFD Power Distribution Block (Required with VFD Motors)	$650
Compressor Cylinder Unloading (Per Unloader) 4D - 1 @ 50%; 6D - 2 @ 67% / 33%; 8D - 2 @ 75% / 50%	$1,070
Gauge Kit (High / Low / Oil Pressure)	$1,690
** Liquid Line Solenoid Valve Installed (5 - 22 HP)**	$1,070
** Liquid Line Solenoid Valve Installed (22 - 60 HP)**	$1,410
Hot Gas Bypass to Evaporator (Capacity Control)	$1,870
Hot Gas Bypass to Suction Line (Capacity Control)	$3,110
Heat Reclaim Valve	C/F
Discharge Line Check Valve	C/F
Isolation Ball Valves	C/F
Hurricane-Rated Kits (All C-Series)	$1,500

** NOTE: For Dual (CD) units, add option per circuit (2X).*

*** It is recommended that liquid line solenoid valves be installed at the evaporator, except in instances of very short line runs.*

C/F = Contact APPLICATION ENGINEERING For Special Requests.

NON-FUSED DISCONNECT MOUNTED	LIST PRICE	FUSED DISCONNECT (SHIP LOOSE)	LIST PRICE 230V (K)	LIST PRICE 460V (M)
60 AMP	$1,540	60 AMP	$1,460	$1,460
100 AMP	$1,880	100 AMP	$2,680	$2,680
200 AMP	$2,970	200 AMP	$3,290	$3,290
400 AMP	$5,960	400 AMP	$7,960	$7,960
600+ AMP	C/F	600+ AMP	C/F	C/F

***NOTE:** For Dual (CD) units, there is a single point power connection.*
Add amperage for entire unit (include evaporator and / or heater amps).

Select a single disconnect for amperage required.

C/F = Contact APPLICATION ENGINEERING For Special Requests.

CONDENSER FANS *	CONDENSER CLEAN OUT DOORS
1 X 1	$160
1 X 2	$320
1 X 3	$470
1 X 4	$630
1 X 5	$790
1 X 6	$950
2 X 2	$320
2 X 3	$630
2 X 4	$950
2 X 5	$1,260
2 X 6	$1,580

* For number of fans, refer to technical bulletin.

For 230 V evaporators on 460 V condensing units, consult Application Engineering.

Prices, product availability, and specifications are subject to change without notice.

LARGE AIR-COOLED CONDENSING UNIT OPTIONS

LARGE CONDENSING UNIT COIL COATING and SPECIAL FIN OPTION PRICING

UNIT MODEL	ELECTROFIN COATED COIL	POLYESTER FIN COATING *	COPPER FIN	UNIT MODEL	ELECTROFIN COATED COIL	POLYESTER FIN COATING *	COPPER FIN	UNIT MODEL	ELECTROFIN COATED COIL	POLYESTER FIN COATING *	COPPER FIN
CS*0100M*	$1,250	$1,040	$2,730	CP*-0100M*	$1,250	$1,040	$2,730	CD*0100M*	$1,140	$950	$2,520
CS*0150M*	$1,630	$1,350	$3,610	CP*-0150M*	$1,280	$1,070	$2,820	CD*0150M*	$1,280	$1,070	$2,820
CS*0200M*	$1,630	$1,350	$3,610	CP*-0160M*	$1,630	$1,350	$3,610	CD*0160M*	$1,630	$1,350	$3,610
CS*0250M*	$1,750	$1,460	$3,870	CP*-0180M*	$1,630	$1,350	$3,610	CD*0180M*	$1,630	$1,350	$3,610
CS*0300M*	$1,820	$1,520	$4,030	CP*-0200M*	$1,750	$1,460	$3,870	CD*0200M*	$1,750	$1,460	$3,870
CS*0350M*	$2,600	$2,170	$5,780	CP*-0240M*	$2,240	$1,870	$4,940	CD*0240M*	$2,240	$1,870	$4,940
CS*0400M*	$2,600	$2,170	$5,780	CP*-0300M*	$2,600	$2,170	$5,780	CD*0300M*	$2,600	$2,170	$5,780
				CP*-0400M*	$2,600	$2,170	$5,780	CD*0400M*	$2,600	$2,170	$5,780
				CP*0500M*	$3,160	$2,640	$7,010	CD*0500M*	$3,160	$2,640	$7,010
CS*0101M*	$1,630	$1,350	$3,610	CP*0600M*	$3,500	$2,920	$7,700	CD*0600M*	$3,500	$2,920	$7,700
CS*0151M*	$1,750	$1,460	$3,870	CP*0700M*	$4,890	$4,070	$10,730	CD*0700M*	$5,200	$4,340	$11,490
CS*0201M*	$1,750	$1,460	$3,870	CP*0800M*	$5,400	$4,490	$11,890	CD*0800M*	$5,400	$4,490	$11,890
CS*0251M*	$2,600	$2,170	$5,780								
CS*0301M*	$2,600	$2,170	$5,780	CP*-0101M*	$1,280	$1,070	$2,820	CD*0101M*	$1,280	$1,070	$2,820
CS*0351M*	$3,500	$2,920	$7,700	CP*-0151M*	$1,630	$1,350	$3,610	CD*0151M*	$1,630	$1,350	$3,610
CS*0401M*	$4,480	$3,740	$9,810	CP*-0161M*	$1,750	$1,460	$3,870	CD*0161M*	$1,750	$1,460	$3,870
				CP*-0181M*	$2,240	$1,870	$4,940	CD*0181M*	$2,240	$1,870	$4,940
				CP*-0201M*	$2,600	$2,170	$5,780	CD*0201M*	$2,600	$2,170	$5,780
CS*0102M*	$1,280	$1,070	$2,820	CP*-0241M*	$2,600	$2,170	$5,780	CD*0241M*	$2,600	$2,170	$5,780
CS*0152M*	$2,240	$1,870	$4,940	CP*-0301M*	$3,160	$2,640	$7,010	CD*0301M*	$3,160	$2,640	$7,010
CS*0202M*	$2,240	$1,870	$4,940	CP*-0401M*	$3,500	$2,920	$7,700	CD*0401M*	$3,500	$2,920	$7,700
CS*0252M*	$2,240	$1,870	$4,940	CP*0501M*	$5,200	$4,340	$11,490	CD*0501M*	$4,890	$4,070	$10,730
CS*0302M*	$2,240	$1,870	$4,940	CP*0601M*	$5,200	$4,340	$11,490	CD*0601M*	$5,200	$4,340	$11,490
CS*0352M*	$3,160	$2,640	$7,010	CP*0701M*	$6,890	$5,740	$15,200	CD*0701M*	$6,320	$5,260	$13,920
				CP*0801M*	$8,300	$6,910	$18,290	CD*0801M*	$8,300	$6,910	$18,290
CS*0150L*	$1,280	$1,070	$2,820	CP*-0162M*	$2,240	$1,870	$4,940	CD*-0162M*	$2,240	$1,870	$4,940
CS*0220L*	$1,630	$1,350	$3,610	CP*-0202M*	$2,240	$1,870	$4,940	CD*-0202M*	$2,240	$1,870	$4,940
CS*0270L*	$1,750	$1,460	$3,870	CP*-0402M*	$3,160	$2,640	$7,010	CD*-0402M*	$3,160	$2,640	$7,010
CS*0300L*	$1,820	$1,520	$4,030	CP*-0702M*	$5,400	$4,490	$11,890	CD*-0702M*	$5,400	$4,490	$11,890
CS*0151L*	$1,630	$1,350	$3,610								
CS*0221L*	$1,750	$1,460	$3,870	CP*0300L*	$2,240	$1,870	$4,940	CD*0300L*	$2,240	$1,870	$4,940
CS*0271L*	$2,440	$2,030	$5,420	CP*0440L*	$2,700	$2,250	$5,960	CD*0440L*	$2,600	$2,170	$5,780
CS*0301L*	$2,600	$2,170	$5,780	CP*0540L*	$2,600	$2,170	$5,780	CD*0540L*	$3,160	$2,640	$7,010
CS*0222L*	$2,240	$1,870	$4,940	CP*0600L*	$3,500	$2,920	$7,700	CD*0600L*	$3,500	$2,920	$7,700
CS*0272L*	$2,240	$1,870	$4,940	CP*0301L*	$2,600	$2,170	$5,780	CD*0301L*	$2,600	$2,170	$5,780
CS*0302L*	$2,240	$1,870	$4,940	CP*0441L*	$3,500	$2,920	$7,700	CD*0441L*	$3,160	$2,640	$7,010
				CP*0541L*	$4,480	$3,740	$9,810	CD*0541L*	$4,480	$3,740	$9,810
				CP*0601L*	$5,200	$4,340	$11,490	CD*0601L*	$5,200	$4,340	$11,490
				CP*0602L*	$4,480	$3,740	$9,810	CD*0602L*	$4,480	$3,740	$9,810

** Polyester fin coating is a vinyl coated fin material.*

C/F = Contact APPLICATION ENGINEERING For Special Requests.

Prices, product availability, and specifications are subject to change without notice.

LARGE AIR-COOLED CONDENSING UNIT RECEIVER SIZING

Receiver Volume = Flooding Charge + Liquid Line + Evaporator Charge

The receiver pump down capacity (volume) should be compared to the required system charge whenever any of the following occurs:

- Multiple evaporators are matched to one compressor
- Any industrial evaporator is used (tubing larger than 1/2" OD)
- Liquid line is known to exceed 100 feet in length

WINTER FLOODING CHARGE

The additional refrigerant that must be added to the system to flood the condenser for winter operation. The charge can be obtained from Tables 4A - 4C.

Winter Flooding Charge = Winter Charge - Summer Charge

LIQUID LINE CHARGE

The weight of the refrigerant in a liquid line per 100 feet is shown in Table 1.

TABLE 1	LIQUID LINE REFRIGERANT WEIGHT DURING OPERATION POUNDS PER 100 LINEAL FEET (TYPE "L" TUBING)					
REFRIGERANT	**1/2" OD**	**5/8" OD**	**7/8" OD**	**1-1/8" OD**	**1-3/8" OD**	**1-5/8" OD**
R-404A / R-507A	6.40	10.30	21.20	36.10	55.00	78.00
R-407A / R-407F	7.01	11.27	23.20	39.51	60.20	85.38
R-448A / R-449A	6.71	10.80	22.24	37.86	57.69	81.81
R-22	7.40	11.80	24.40	41.60	63.50	90.00

EVAPORATOR CHARGE

The evaporator liquid charge is estimated to be between 15% and 30% of the coil volume at the density of the refrigerant at the saturated suction temperature of the coil. See Table 2 for densities at varying temperatures.

Evaporator Liquid Charge = Evaporator Coil Volume x 0.30 x Density

TABLE 2	DENSITY TABLE (LB / CUBIC FEET) LIQUID TEMPERATURE (°F)			
REFRIGERANT	**-20° F**	**0° F**	**20° F**	**90° F**
R-404A / R-507A	77.30	74.90	72.30	60.40
R-407A / R-407F	84.00	81.60	79.10	69.30
R-448A / R-449A	80.60	78.30	75.90	65.90
R-22	85.80	83.60	81.40	72.50

Prices, product availability, and specifications are subject to change without notice.

LARGE AIR-COOLED CONDENSING UNIT RECEIVER SIZING *continued*

RECEIVER SIZE and PRICING

If you require a larger receiver, see Table 3A for receiver capacity chart and pricing.

EXAMPLE:

Verify the receiver sizing for the following matched system:
(1) CS*-0300M4M Condensing Unit (10-3/4" x 48" Receiver, 114 LB, R-404A @ 80%)
(2) SM36A1498 (2.24 cu ft or 49.38 LB R-404A each)

STEP 1: Determine the Winter Flooding Charge

From Table 4A (or CS IO Manual) calculate the difference in operating charge between -20° F and 70° F (adjust temperatures per the location):

Winter Flooding Charge = 86.1 - 46.9 = 39.2 LB R-404A

STEP 2: Determine the Liquid Line Charge

If the actual length is not known, use the best judgment in determining length of liquid line. The liquid line should be sized based on line sizing charts for the application, not just the liquid line connection on the condensing unit. For this example 100 feet of 7/8" OD tubing is assumed:

From Table 1, 21.2 LB of R-404A

STEP 3: Determine the Evaporator Charge

Evaporator coil volume is 2.24 cu ft. or 49.38 LB R-404A. (Multiply cubic feet by percent of coil assumed to be liquid and the density (Table 2) of the liquid refrigerant @ 90° F.)

Evaporator Liquid Charge = 49.38 LB x 2 coils = 98.76 LB R-404A

STEP 4: Calculate the Total Charge Required for Receiver Volume

Required Charge = 39.2 + 21.2 + 98.76 = 159.2 LB R-404A

Receiver volume is 114 LB. Therefore the standard receiver is NOT adequate for full pump down.
The correct receiver for the application from Table 3 is the 10-3/4" x 72" vessel.

Larger Receiver Price Adder = "E" Receiver List Price $3,120 - "D" receiver List Price $1,850.
For an option price, add of $1,270.

TABLE 3A

RECEIVER LETTER DESIGNATION	RECEIVER SIZE	RECEIVER CAPACITY AT 80% FULL				LIST PRICE	HEATED AND INSULATED LIST PRICE
		R-404A / R-507A	R-407A / F	R-448A / R-449A	R-22		
A	8-5/8" x 28"	43	47	45	48	$1,480	$1,860
B	8-5/8" x 48"	75	82	79	84	$1,730	$2,090
C	8-5/8" x 60"	94	103	99	106	$1,890	$2,220
D	10-3/4" x 48"	114	125	120	128	$1,940	$2,280
E	10-3/4" x 72"	174	190	183	195	$3,280	$2,350
F	10-3/4" x 96"	233	255	244	262	$3,640	$2,450
G	10-3/4" x 108"	263	288	276	295	$4,220	$2,550
H	10-3/4" x 144"	347	380	364	390	$4,960	$3,190

The list price add for an OVERSIZED RECEIVER is obtained by subtracting the list price of the original receiver from the list price of the larger receiver.

To add HEAT AND INSULATED to a receiver, use the list price shown next to the corresponding receiver size.

SEE TABLE 3B FOR MAXIMUM RECEIVER SIZE PER CONDENSER LENGTH.

TABLE 3B

CONDENSER DRAWING LETTER *	MAXIMUM LENGTH OF RECEIVER
CS-11	48"
CS-12	108"
CS-13	144"
CS-22	108"
CP-23	144"
CD-11	48"
CD-12	108"
CD-13	144"
CD-24	144"

*** See Unit Brochure**

Prices, product availability, and specifications are subject to change without notice.

LARGE AIR-COOLED CONDENSING UNIT RECEIVER SIZING *continued*

TABLE 4A: CS* Unit Refrigerant Charge

MODEL	REFRIGERANT	REFRIGERANT CHARGE (LB)					
		ABOVE 70° F	50° F	30° F	10° F	0° F	BELOW -20° F
CS*0100MS	R-22	29.10	39.80	43.60	45.90	46.80	48.40
CS*0150MS	R-22	31.60	37.30	44.80	49.00	50.60	53.10
CS*0200MS	R-22	31.60	37.30	44.80	49.00	50.60	53.10
CS*0250MS	R-22	42.40	50.70	61.90	68.20	70.50	74.20
CS*0300MS	R-22	53.20	64.20	79.00	87.40	90.40	95.30
CS*0350MS	R-22	55.70	58.60	71.90	84.00	88.50	95.40
CS*0400MS	R-22	72.50	76.00	89.60	101.90	106.60	113.70
CS*0500MS	R-22	80.60	97.00	119.30	131.80	136.40	143.70
CS*0600MS	R-22	97.10	101.80	120.00	136.40	142.60	152.20
CS*0101MS	R-22	31.60	42.40	48.30	51.60	53.00	55.50
CS*0151MS	R-22	42.40	58.40	67.10	72.10	74.10	77.80
CS*0201MS	R-22	42.40	58.40	67.10	72.10	74.10	77.80
CS*0251MS	R-22	42.30	48.00	60.60	67.10	69.50	73.40
CS*0301MS	R-22	55.70	63.90	82.70	92.40	95.90	101.70
CS*0351MS	R-22	80.40	91.50	116.60	129.70	134.50	142.20
CS*0401MS	R-22	91.20	132.90	155.90	168.70	173.80	183.50
CS*0501MS	R-22	112.90	129.40	166.90	186.40	193.50	205.00
CS*0601MS	R-22	137.00	158.40	208.20	234.00	243.30	258.40
CS*0150LQ	R-22	31.80	52.00	55.00	56.90	57.70	59.20
CS*0220LQ	R-22	31.60	47.50	51.80	54.10	55.20	57.10
CS*0270LQ	R-22	36.90	60.30	66.60	70.00	71.50	74.10
CS*0300LQ	R-22	36.90	60.30	66.60	70.00	71.50	74.10
CS*0151LQ	R-22	36.90	60.30	66.60	70.00	71.50	74.10
CS*0221LQ	R-22	36.90	60.30	66.60	70.00	71.50	74.10
CS*0271LQ	R-22	36.80	53.80	62.10	66.50	68.40	71.40
CS*0301LQ	R-22	50.20	75.60	87.90	94.40	97.30	101.60
CS*0150MS	R-404A	27.90	33.40	40.20	44.20	45.70	48.10
CS*0200MS	R-404A	27.90	33.40	40.20	44.20	45.70	48.10
CS*0250MS	R-404A	37.40	45.40	55.60	61.50	63.60	67.10
CS*0300MS	R-404A	46.90	57.40	70.90	78.70	81.60	86.10
CS*0350MS	R-404A	42.20	45.00	53.30	60.90	63.80	68.20
CS*0400MS	R-404A	70.80	75.70	91.90	106.80	112.50	121.00
CS*0151MS	R-404A	37.40	52.10	60.20	64.90	66.80	70.30
CS*0201MS	R-404A	37.40	52.10	60.20	64.90	66.80	70.30
CS*0251MS	R-404A	49.00	57.10	74.10	83.20	86.50	91.80
CS*0301MS	R-404A	63.90	72.90	90.20	99.60	103.10	108.70
CS*0351MS	R-404A	71.00	100.20	116.30	125.70	129.40	136.40
CS*0401MS	R-404A	95.10	134.10	155.60	168.10	173.10	182.40
CS*0150LS	R-404A	29.50	43.70	47.50	50.00	50.80	52.50
CS*0220LS	R-404A	29.30	37.90	43.30	46.60	47.90	50.30
CS*0270LS	R-404A	39.50	52.10	60.20	64.90	66.80	70.30
CS*0300LS	R-404A	44.80	61.20	71.80	77.90	80.40	84.90
CS*0151LS	R-404A	29.30	42.40	46.40	48.80	49.80	51.60
CS*0221LS	R-404A	39.50	58.90	64.80	68.30	69.80	72.40
CS*0271LS	R-404A	39.40	53.10	60.90	65.20	67.10	70.00
CS*0301LS	R-404A	52.20	72.40	83.90	90.20	93.00	97.10

Prices, product availability, and specifications are subject to change without notice.

LARGE AIR-COOLED CONDENSING UNIT RECEIVER SIZING *continued*

TABLE 4B: CD* Unit Refrigerant Charge *

MODEL	REFRIGERANT	REFRIGERANT CHARGE (LB)					
		ABOVE 70° F	50° F	30° F	10° F	0° F	BELOW -20° F
CD*0100MS	R-22	14.70	18.50	19.80	20.70	21.00	21.60
CD*0150MS	R-22	17.40	24.50	27.00	28.50	29.00	30.00
CD*0160MS	R-22	17.30	20.20	24.00	26.10	26.90	28.20
CD*0180MS	R-22	17.30	20.20	24.00	26.10	26.90	28.20
CD*0200MS	R-22	29.00	33.40	39.10	42.40	43.60	45.60
CD*0240MS	R-22	31.60	37.30	44.80	49.00	50.60	53.10
CD*0300MS	R-22	32.90	34.50	41.20	47.30	49.60	53.20
CD*0400MS	R-22	32.90	34.50	41.20	47.30	49.60	53.20
CD*0500MS	R-22	42.30	44.40	53.40	61.50	64.60	69.20
CD*0600MS	R-22	53.20	64.20	79.00	87.40	90.40	95.30
CD*0700MS	R-22	55.70	58.60	71.90	84.00	88.50	95.40
CD*0800MS	R-22	80.40	84.50	102.30	118.50	124.60	133.80
CD*1000MS	R-22	80.30	83.90	89.70	109.10	117.50	126.40
CD*1200MS	R-22	104.80	108.70	110.60	130.40	144.00	155.10
CD*0101MS	R-22	17.40	26.00	28.00	29.30	29.80	30.70
CD*0151MS	R-22	17.30	22.70	25.70	27.40	28.10	29.40
CD*0161MS	R-22	20.00	27.90	32.30	34.70	35.70	37.50
CD*0181MS	R-22	31.60	42.40	48.30	51.60	53.00	55.50
CD*0201MS	R-22	32.90	37.10	46.60	51.60	53.40	56.30
CD*0241MS	R-22	32.90	37.10	46.60	51.60	53.40	56.30
CD*0301MS	R-22	42.30	48.00	60.60	67.10	69.50	73.40
CD*0401MS	R-22	42.40	58.40	67.10	72.10	74.10	77.80
CD*0501MS	R-22	42.30	48.00	60.60	67.10	69.50	73.40
CD*0601MS	R-22	55.70	63.90	82.70	92.40	95.90	101.70
CD*0701MS	R-22	80.40	91.50	116.60	129.70	134.50	142.20
CD*0801MS	R-22	90.80	95.90	126.10	145.90	152.30	164.10
CD*1001MS	R-22	117.90	122.30	147.40	176.90	186.10	203.10
CD*1201MS	R-22	136.60	141.60	157.90	198.10	209.50	231.50
CD*0440LQ	R-22	23.90	36.50	42.70	45.90	47.30	49.40
CD*0540LQ	R-22	27.80	44.50	52.60	56.90	58.70	61.50
CD*0600LQ	R-22	36.90	60.30	66.60	70.00	71.50	74.10
CD*0441LQ	R-22	27.80	44.50	52.60	56.90	58.70	61.50
CD*0541LQ	R-22	33.20	63.80	71.90	76.10	78.00	81.20
CD*0601LQ	R-22	44.70	69.90	82.10	88.50	91.30	95.50
CD*0400MS	R-404A	29.00	30.90	37.10	42.70	44.90	48.10
CD*0500MS	R-404A	37.30	39.80	48.00	55.50	58.40	62.70
CD*0600MS	R-404A	46.90	57.40	70.90	78.70	81.60	86.10
CD*0700MS	R-404A	42.20	45.00	53.30	60.90	63.80	68.20
CD*0800MS	R-404A	70.80	75.70	91.90	106.80	112.50	121.00
CD*0401MS	R-404A	37.40	52.10	60.20	64.90	66.80	70.30
CD*0501MS	R-404A	49.00	51.70	74.10	83.20	86.50	91.80
CD*0601MS	R-404A	63.90	72.90	90.20	99.60	103.10	108.70
CD*0701MS	R-404A	70.70	75.80	96.50	110.40	115.00	123.40
CD*0801MS	R-404A	94.70	101.50	129.20	147.70	153.90	165.00
CD*0440LS	R-404A	30.50	33.30	41.90	46.50	48.20	51.00
CD*0540LS	R-404A	39.40	42.90	54.40	60.50	62.80	66.40
CD*0600LS	R-404A	39.50	52.10	60.20	64.90	66.80	70.30
CD*0441LS	R-404A	39.50	58.90	64.80	68.30	69.80	72.40
CD*0541LS	R-404A	44.80	70.20	78.00	82.40	84.30	87.60
CD*0601LS	R-404A	52.20	72.40	83.90	90.20	93.00	97.10

All units have two refrigerant circuits. Refrigerant charge shown is per circuit.

Prices, product availability, and specifications are subject to change without notice.

LARGE AIR-COOLED CONDENSING UNIT RECEIVER SIZING *continued*

TABLE 4C: CP* Unit Refrigerant Charge

MODEL	REFRIGERANT	REFRIGERANT CHARGE (LB)					
		ABOVE 70° F	50° F	30° F	10° F	0° F	BELOW -20° F
CP*0500MS	R-22	80.40	84.50	102.30	118.50	124.60	133.80
CP*0600MS	R-22	107.90	129.90	159.70	176.30	182.40	192.20
CP*0700MS	R-22	112.90	118.80	145.40	169.50	178.60	192.40
CP*0800MS	R-22	160.70	168.90	204.60	236.90	249.10	267.70
CP*1000MS	R-22	160.50	167.80	179.50	218.30	235.00	252.80
CP*1200MS	R-22	144.10	149.50	152.10	190.60	217.30	238.30
CP*0501MS	R-22	80.40	91.50	116.60	129.70	134.50	142.20
CP*0601MS	R-22	112.90	129.40	166.90	186.40	193.50	205.00
CP*0701MS	R-22	137.00	158.40	208.20	234.00	243.30	258.40
CP*0801MS	R-22	181.50	191.90	252.30	291.70	304.70	328.20
CP*1001MS	R-22	170.30	176.70	225.60	283.60	301.50	334.30
CP*1201MS	R-22	199.40	206.80	237.90	317.10	339.30	382.10
CP*0440LQ	R-22	44.70	69.90	82.10	88.50	91.30	95.50
CP*0540LQ	R-22	52.60	85.90	102.10	110.50	114.20	119.70
CP*0600LQ	R-22	58.30	104.50	116.80	123.30	126.20	131.20
CP*0441LQ	R-22	52.60	85.90	102.10	110.50	114.20	119.70
CP*0541LQ	R-22	63.40	124.50	140.60	149.10	152.80	159.10
CP*0601LQ	R-22	73.90	123.60	147.90	160.40	165.90	174.10
CP*0500MS	R-404A	70.80	75.70	91.90	106.80	112.50	121.00
CP*0600MS	R-404A	95.10	116.10	143.20	158.80	164.60	173.70
CP*0700MS	R-404A	85.70	91.40	108.00	123.20	129.10	137.90
CP*0800MS	R-404A	141.60	151.40	183.90	213.60	225.00	242.10
CP*0501MS	R-404A	99.40	115.70	149.60	167.80	174.50	185.20
CP*0601MS	R-404A	106.70	123.40	157.60	175.90	182.70	193.50
CP*0701MS	R-404A	141.40	149.20	193.00	220.80	230.10	246.80
CP*0801MS	R-404A	159.60	171.60	226.10	262.50	274.60	296.30
CP*0440LS	R-404A	52.20	57.10	74.10	83.20	86.50	91.80
CP*0540LS	R-404A	75.00	81.90	104.60	116.90	121.40	128.60
CP*0600LS	R-404A	75.20	100.20	116.30	125.70	129.40	136.40
CP*0441LS	R-404A	75.20	113.70	125.60	132.40	135.40	140.50
CP*0541LS	R-404A	100.70	152.10	167.90	177.00	181.00	187.90
CP*0601LS	R-404A	105.70	146.30	169.30	150.90	187.50	195.80

Prices, product availability, and specifications are subject to change without notice.

Use your QR reader to reference current document version on krack.com.

Krack, a Hussmann Corporation brand

For all customers inquiries,
visit www.krack.com or call 800.922.1919.

www.krack.com
www.hussmann.com

©2025 Krack, a Hussmann Corporation brand